Champion®

The Dishwashing Machine Specialists

Project _____

Item No. _____

Quantity _____

MODEL 80 DRHDPW RACK CONVEYOR

DualRinse

MODEL 80 DRHDPW

44" Single Tank with 36" Heavy Duty Prewash
High Temperature Rack
Conveyor Dishwashing Machine with
Dual Stage Rinse

Shown with Vent Cowl
and Damper Options

STANDARD FEATURES

- **ENERGY STAR® Qualified**
- *Exclusive DualRinse Technology*
- Dual-pawl cradle drive system
- One-piece cast stainless steel upper & lower spray arm assemblies
- Internal removable scrap basket and two-piece scrap screen
- Standard vertical opening accommodates 18" x 26" sheet pans
- Wide 26" leakproof doors, internally-fitted
- Anti-jam conveyor drive system
- Energy Sentinel (Idle pump shut-off)
- Convenient top-mounted controls
- Automatic tank fill
- Common utility connections
- Door safety switch
- Door activated drain closure
- Enclosure panels (front and sides)
- Splash shields
- Low-water tank heat protection
- Rinse-saver device
- Stainless steel heavy-gauge construction, including base and feet
- Electric tank heat
- Prewash pump 1 Hp motor
- External prewash scrap basket
- Wash pump 2 Hp motor
- Stainless steel pump and impeller
- Single-point electrical connection

The DualRinse feature offers the ***Lowest Water/Utility/Chemical Consumption*** *while circulating a generous 300+ gallons of water for* ***Consistently Good Results***

SPECIFIER STATEMENT

Specified unit will be Champion Model 80 DRHDPW high temperature dual rinse rack conveyor dishwashing machine with 36" prewash. Constructed of Type 304 stainless steel and measuring 80" long with 20-3/4" vertical opening. Features top mounted control cabinet; upper and lower one-piece stainless steel spray arm assemblies, removable internal scrap basket with two-piece scrap screen, external prewash scrap basket. Large 26" access doors with front access and double-hook safety latch. Anti-jam conveyor drive system.

1 year parts and labor warranty.

E-SERIES DualRinse

Champion Industries, Inc.
2674 N. Service Road,
Jordan Station, Ontario, Canada L0R 1S0
Tel: 800/263-5798 Fax: 905/562-4618

Champion Industries, Inc.
P. O. Box 4149, Winston-Salem, NC 27115
Tel: 800/532-8591 Fax: 336/661-1979
www.championindustries.com

CH073
(1M) 2/05 Printed in U.S.A.

Champion®

The Dishwashing Machine Specialists

MODEL 80 DRHDPW

44" Single Tank with 36" Heavy Duty Prewash
High Temperature Rack
Conveyor Dishwashing Machine with
Dual Stage Rinse

EFFICIENT NEW SPRAY SYSTEM DESIGN

To make the E-Series more efficient and more forgiving we designed a new spray arm system that includes:

- Wall-of-water spray pattern via stainless steel fluted directional spray jets for quick and efficient washing
- Easily removable spray arm assembly for ease of cleaning
- Stainless steel pump housing and impeller
- Larger tanks hold more water for better washing results

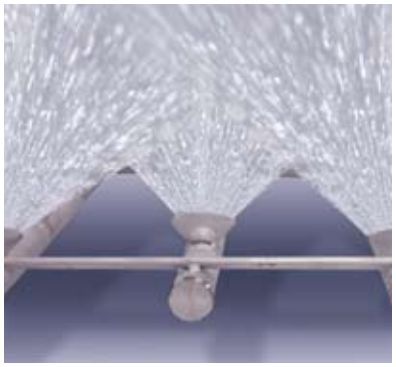

Wall-of-Water Spray Pattern

One-Piece Cast Stainless Steel Spray Assembly

INTEGRATED BOOSTER HEATER

As well as the E-Series performs, we created a way to make it perform even better. The electric booster heater may be optional, but it is an exceptional value — engineered within the E-Series footprint to offer a variety of advantages over other booster designs, such as:

- Inter-plumbed and inter-wired
- One control shuts off washer and booster
- 12 kW for 40°F rise
- 22 kW for 70°F rise
- Conductive heat transfer to wash tank
- Stainless steel booster heater lasts the life of the machine
- Integrated design saves floor space

Large Heating Element

Stainless Steel Built-in Nested Booster

Two-Piece Scrap Screen

Built-in Scrap Basket

LESS IS MORE WITH CHAMPION'S DUAL RINSE MODEL 80 DRHDPW

Check our NSF listings and you'll see the 80 DRHDPW offers the lowest water consumption in its class with less than .54 US gallons per rack. Water consumption this low means energy savings too. Our 40°F rise booster only requires 12 kW and 70°F rise is only 22 kW.

What the numbers don't show you is the advantage that our Dual Rinse technology provides by making sure all wares are fully rinsed with more than 300 gallons per hour while actual fresh water consumption is only 112 gallons per hour.

MODEL 80 DRHDPW

44" Single Tank with 36" Heavy Duty Prewash
High Temperature Rack
Conveyor Dishwashing Machine with
Dual Stage Rinse

Champion®
The Dishwashing Machine Specialists

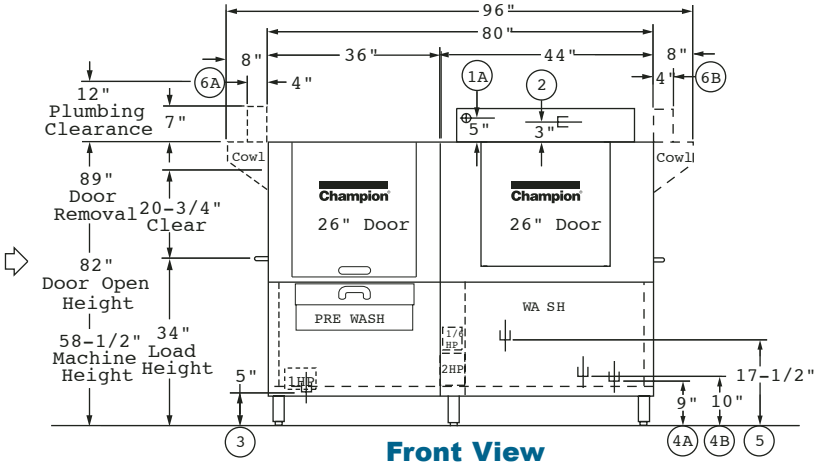

Front View Without Booster

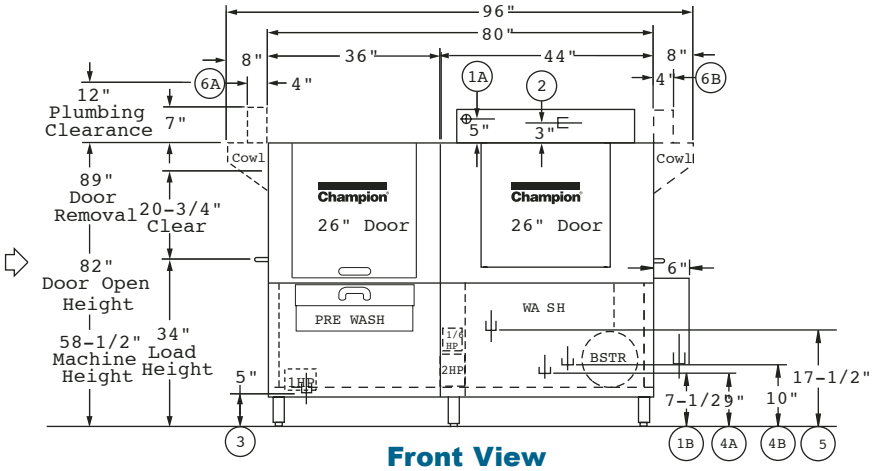

Front View With Booster

Left-to-Right Operation

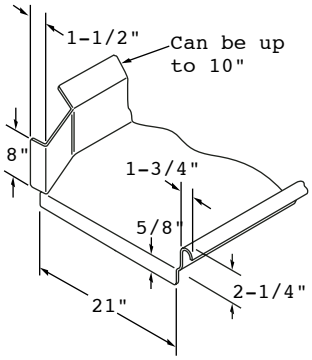

Suggested Table Construction

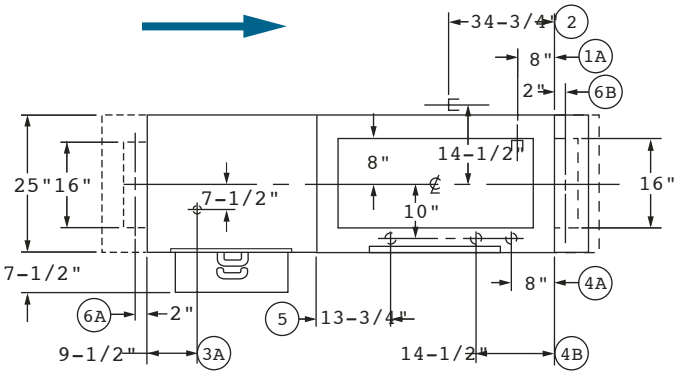

Plan View

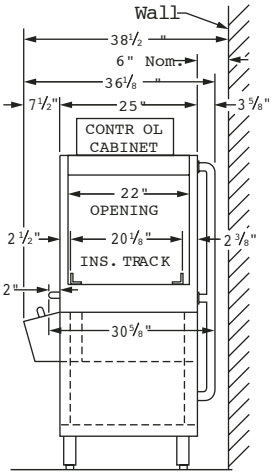

End View

Champion Industries, Inc., P. O. Box 4149, Winston-Salem, NC 27115 • 800/532-8591 • Fax: 336/661-1979 • www.championindustries.com
2674 N. Service Road, Jordan Station, Ontario, Canada L0R 1S0 • 800/263-5798 • Fax: 905/562-4618

MODEL 80 DRHDPW

44" Single Tank with 36" Heavy Duty Prewash
High Temperature Rack
Conveyor Dishwashing Machine with
Dual Stage Rinse

Champion®
The Dishwashing Machine Specialists

Dimensions shown in inches

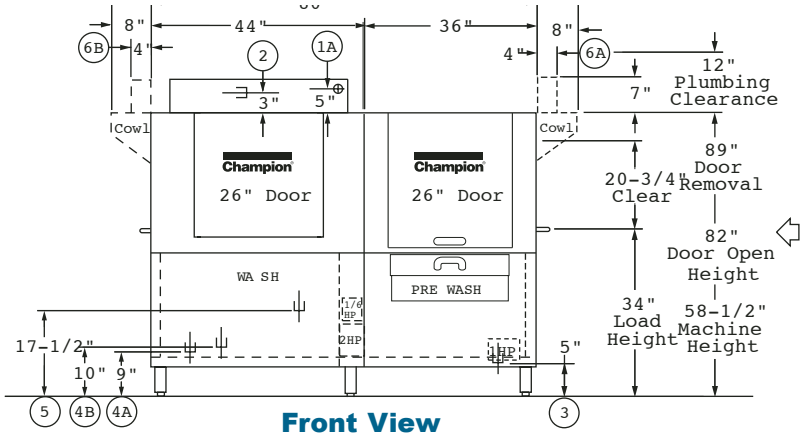

Front View Without Booster

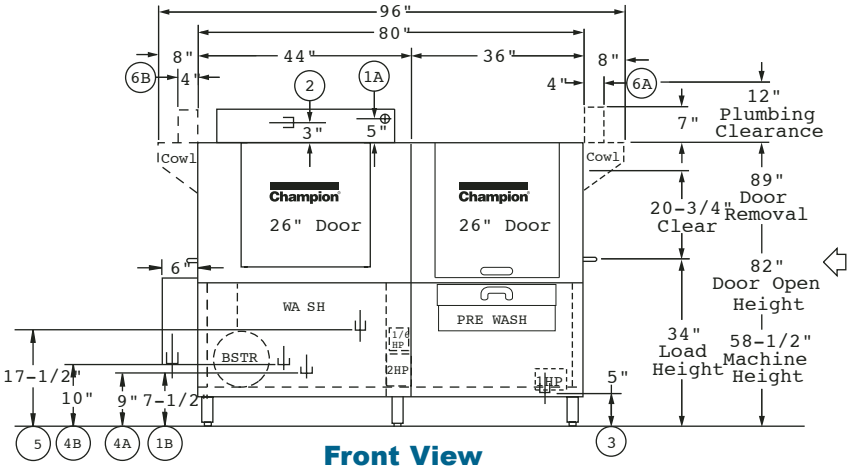

Front View With Booster

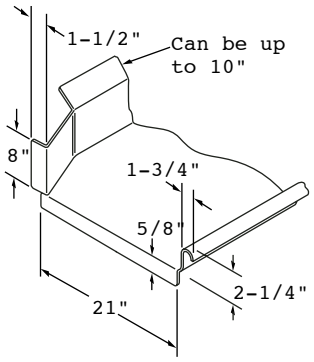

Suggested Table Construction

Right-to-Left Operation

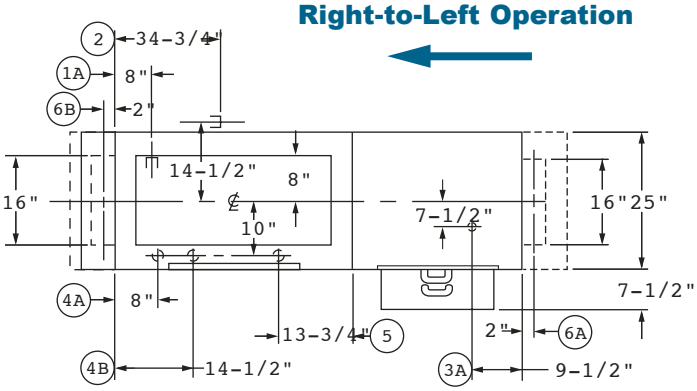

Plan View

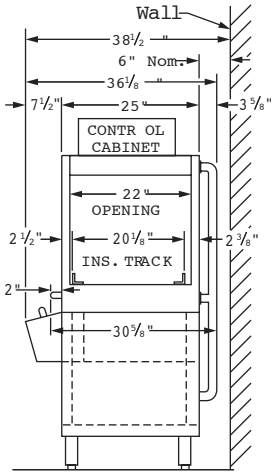

End View

Champion Industries, Inc., P. O. Box 4149, Winston-Salem, NC 27115 • 800/532-8591 • Fax: 336/661-1979 • www.championindustries.com
2674 N. Service Road, Jordan Station, Ontario, Canada L0R 1S0 • 800/263-5798 • Fax: 905/562-4618

MODEL 80 DRHDPW

44" Single Tank with 36" Heavy Duty Prewash
High Temperature Rack
Conveyor Dishwashing Machine with
Dual Stage Rinse

Champion®
The Dishwashing Machine Specialists

Volume crated: **156 cu. ft.**
Shipping weight crated: **900 lbs.**

Utilities

1 Electrical Connection
A Machine Only (see Table A)
Machine & Booster (see Table B)

2 Hot Water
3/4" NPT 180°F/82°C min. hot water connection. (Machine without booster.)
3/4" NPT 140°F/60°C min. hot water connection. (40°F/34°C rise booster)
3/4" NPT 110°F/49°C min. hot water connection. (70°F/39°C rise booster)
Flow pressure 20-22 psi.

3 Drain
1-1/2" NPT machine connection.
Maximum flow 15 gpm.

4 Steam
A 3/4" NPT machine connection.
Flow pressure 15-30 PSI. (Steam coil)
B 3/4" NPT machine connection.
Flow pressure 15-30 PSI.
(Steam injector)

5 Condensate (no back pressure)
1/2" NPT machine return to boiler

6 Vents
A Load end: 200 CFM @ 1/4" S.P.
B Unload end: 400 CFM @ 1/4" S.P.
(With blower-dryer increase room ventilation by 600 CFM.)

TABLE A - Machine Connection

Machine only

Elec. Specs.	Rated Amps	Minimum Supply Ckt. Conductor Ampacity	Maximum Overcurrent Protective Device
208/60/1	120	150	150
240/60/1	105	150	150
208/60/3	74	100	100
240/60/3	65	90	90
480/60/3	33	45	45
575/60/3	25	35	35

TABLE B - Machine & Booster Connection

40°F/22°C Rise – 12 kW
Machine and Electric built-in booster

Elec. Specs.	Rated Amps	Minimum Supply Ckt. Conductor Ampacity	Maximum Overcurrent Protective Device
208/60/1	178	225	225
240/60/1	155	200	200
208/60/3	108	150	150
240/60/3	94	125	125
480/60/3	47	60	60
575/60/3	37	50	50

70°F/39°C Rise – 22 kW
Machine and Electric built-in booster

Elec. Specs.	Rated Amps	Minimum Supply Ckt. Conductor Ampacity	Maximum Overcurrent Protective Device
208/60/1	226	300	300
240/60/1	197	250	250
208/60/3	136	175	175
240/60/3	118	150	150
480/60/3	60	80	80
575/60/3	47	60	60

Machine and steam built-in booster

Elec. Specs.	Rated Amps	Minimum Supply Ckt. Conductor Ampacity	Maximum Overcurrent Protective Device
208/60/1	42	60	60
240/60/1	37	50	50
208/60/3	29	40	40
240/60/3	26	35	35
480/60/3	12	15	15
575/60/3	10	15	15

SPECIFICATIONS

Capacity

Racks per hr. (NSF rated)	208
Wash tank (US gal.)	21
Conveyor speed (ft/min.)	5.8

Motor Horsepower

Drive	1/6
Prewash	1
Wash	2
DualRInse	1/10

Water Consumption

US Gal. per hr. (max. use)	112
US Gal. per rack	.54

Heating

Wash Tank, electric (kW)	15
DualRinse Tank electric (kW)	3
Tank heat, steam (lbs/hr. required at 15 PSI flow pressure)	75
Electric booster (built-in) (kW supplied for 40°F rise)	12
Electric booster (kW supplied for 70°F rise)	22
Steam booster (lbs./hr. required for 40°F rise)	60
Steam booster (lbs./hr. required for 70°F rise)	106

Venting

Load end (minimum CFM)	200
Unload end (minimum CFM)	400

Standard 20" x 20" rack complement

Peg	2
Flat	1

Warning: Plumbing and electrical connections should be made by qualified personnel who will observe all the applicable plumbing, sanitary, safety codes and the National Electrical Code.

Note: Water Hammer Arrestor (meeting ASSE-1010 standard or equivalent) to be supplied (by others) in common water supply line at service connection.

Plumbing Notes: Because of the variation in house-supplied steam and water pressures, steam and water pressure regulating valves (PRVs) may be needed. (Water PRV is standard on machines with booster.) The PRVs can either be purchased from Champion or obtained locally.

Venting Notes: Fabricated duct size: 3-7/8" x 15-7/8" (Outside dimensions)

Due to an ongoing value analysis program at Champion, specifications contained in this catalog are subject to change without notice.

Champion Industries, Inc., P. O. Box 4149, Winston-Salem, NC 27115 • 800/532-8591 • Fax: 336/661-1979 • www.championindustries.com

MODEL 80 DRHDPW RACK CONVEYOR

MODEL 80 DRHDPW

44" Single Tank with 36" Heavy Duty Prewash
High Temperature Rack
Conveyor Dishwashing Machine with
Dual Stage Rinse

Champion®
The Dishwashing Machine Specialists

OPTIONS & ACCESSORIES

- ☐ Tank heat: choice of steam coil, steam injector, hot water coil
- ☐ Blower-dryer with 60" hood, table, legs and pawl bar assembly

Booster Heaters
(completely interplumbed, controls are interwired)

- ☐ Electric: 12 kW (40°F rise) (built-in only)
- ☐ Electric: 22 kW (70°F rise) (built-in only)
- ☐ Steam: 40°F - 70°F rise

- ☐ Cantilever sideloader (with or without hood) for 90° load operation
- ☐ Extended pawl bar (extended drive unit) for use with load tabling
- ☐ 90° Motorized rack advance conveyor (unload)
- ☐ 180° Motorized rack advance conveyor (unload)
- ☐ Racks: peg or flat racks (specify type)
- ☐ Roller conveyor table (mobile or stationary)
- ☐ Steam pressure regulating valve (unmounted)
- ☐ Table limit switch, unmounted (recommended on all rack conveyor installations)
- ☐ Vent cowl, stainless steel with 7" stack and locking damper
- ☐ Water pressure regulating valve (unmounted) (standard with booster)
- ☐ Vent fan control
- ☐ Two-point electrical connection

Model MRC 180
180° Motorized
Rack Curve
(Must be ordered with Roller Conveyor Table)

Model MRA 90
90° Motorized
Rack Curve
(Must be ordered with Roller Conveyor Table)

Cantilever Sideloader
(No hood)

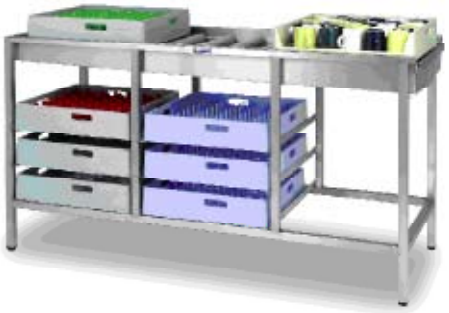

Model RCT 64 or RCT 84
Roller
Conveyor Table