Champion®

The Dishwashing Machine Specialists

Project _____

Item No. _____

Quantity _____

MODEL 120 HDPW RACK CONVEYOR

MODEL 120 HDPW

84" Two Tank with Heavy Duty 36" Prewash
Rack Conveyor High Temperature
Dishwashing Machine

STANDARD FEATURES

- **ENERGY STAR® Qualified**
- Dual-pawl cradle drive system
- One-piece cast stainless steel upper & lower spray arm assemblies
- Internal removable scrap baskets with two-piece scrap screens
- Standard vertical opening accommodates 18" x 26" sheet pans
- Wide 26" leakproof doors, internally-fitted
- Anti-jam conveyor drive system
- Energy Sentinel (Idle pump shut-off)
- Convenient top-mounted controls
- Automatic tank fill
- Common utility connections
- Door safety switch
- Door activated drain closure
- Enclosure panels (front and sides)
- Splash shields
- Low-water tank heat protection
- Rinse-saver device
- Stainless steel heavy-gauge construction, including base and feet
- Electric tank heat
- Prewash pump 1 Hp motor
- External prewash scrap basket
- Wash/rinse pump 3 Hp motors
- Stainless steel pump and impeller
- Single point connection

Shown with Vent Cowl
and Damper Option

SPECIFIER STATEMENT

Specified unit will be Champion Model 120 HDPW, high temperature rack conveyor dishwashing machine with 36" prewash. Constructed of Type 304 stainless steel and measuring 120" long with 20-3/4" vertical opening. Features top mounted control cabinet; upper and lower one-piece stainless steel spray arm assemblies, removable internal scrap baskets with two-piece scrap screens, external prewash scrap basket. Large 26" prewash and front access doors with double-hook safety latch. Anti-jam conveyor drive system.

1 year parts and labor warranty.

E-SERIES

2674 N. Service Road,
Jordan Station, Ontario, Canada L0R 1S0
Tel: 905/562-4195 Fax: 905/562-4618

Champion Industries, Inc.
P. O. Box 4149, Winston-Salem, NC 27115
Tel: 336/661-1556 Fax: 336/661-1979
www.championindustries.com

CH077
(3M) 10/05 Printed in U.S.A.

Champion®

The Dishwashing Machine Specialists

MODEL 120 HDPW

84" Two Tank with Heavy Duty 36" Prewash
Rack Conveyor High Temperature
Dishwashing Machine

EFFICIENT NEW SPRAY SYSTEM DESIGN

To make the E-Series more efficient and more forgiving we designed a new spray arm system that includes:

- Wall-of-water spray pattern via stainless steel fluted directional spray jets for quick and efficient washing
- Easily removable spray arm assembly for ease of cleaning
- Stainless steel pump housing and impeller
- Larger tanks hold more water for better washing results

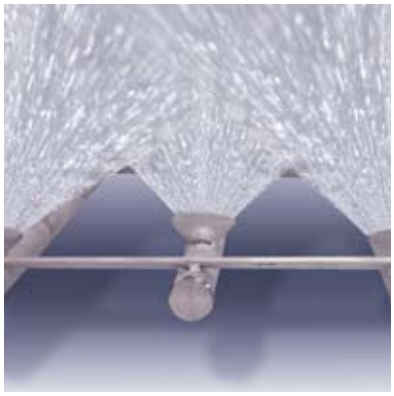

Wall-of-Water Spray Pattern

One-Piece Cast Stainless Steel Spray Assembly

INTEGRATED BOOSTER HEATER

As well as the E-Series performs, we created a way to make it perform even better. The electric booster heater may be optional, but it is an exceptional value — engineered within the E-Series footprint to offer a variety of advantages over other booster designs, such as:

- Inter-plumbed and inter-wired
- One control shuts off washer and booster
- 15 kW for 40°F rise
- 24 kW for 70°F rise
- Conductive heat transfer to wash tank
- Stainless steel booster heater lasts the life of the machine
- Integrated design saves floor space

Large Heating Element

Stainless Steel Built-in Nested Booster

Two-Piece Scrap Screen

Built-in Scrap Basket

E-SERIES

MODEL 120 HDPW

84" Two Tank with Heavy Duty 36" Prewash
Rack Conveyor High Temperature
Dishwashing Machine

Champion®
The Dishwashing Machine Specialists

OPTIONS & ACCESSORIES

- ☐ Tank heat: choice of steam coil, steam injector, hot water coil
- ☐ Blower-dryer with 60" hood, table, legs and cradle assembly

Booster Heaters – stainless steel
(completely interplumbed, controls are interwired)

- ☐ Steam: 40°F - 70°F rise
- ☐ Electric: 15 kW (40°F rise only) (built-in 3 phase only)
- ☐ Electric: 24 kW (70°F max. rise) (3 phase only)

- ☐ Cantilever sideloader (with or without hood) for 90° load operation
- ☐ Extended pawl bar (extended drive unit) for use with load tabling
- ☐ 90° Motorized rack curve (unload)
- ☐ 180° Motorized rack curve (unload)
- ☐ Racks: peg or flat racks (specify type)
- ☐ Roller conveyor table (mobile or stationary)
- ☐ Steam pressure regulating valve (unmounted)
- ☐ Table limit switch, unmounted (recommended on all rack conveyor installations)
- ☐ Vent cowl, stainless steel with 7" stack and locking damper
- ☐ Extended Vent hood, stainless steel with 7" stack and locking damper
- ☐ Water pressure regulating valve (unmounted) (standard with booster)
- ☐ Vent fan control
- ☐ Water hammer kit
- ☐ Drain temp kit
- ☐ Vertical clearance through machine: 24" (instead of standard 20-3/4") for large ware

Model MRC 180
180° Motorized
Rack Curve
(Must be ordered with Roller Conveyor Table)

Model MRC 90
90° Motorized
Rack Curve
(Must be ordered with Roller Conveyor Table)

Cantilever Sideloader
(No hood)

Model RCT 6
or RCT 8
Rolle
Conveyor Tabl

Champion Industries, Inc., P. O. Box 4149, Winston-Salem, NC 27115 • 336/661-1556 • Fax: 336/661-1979 • www.championindustries.com
2674 N. Service Road, Jordan Station, Ontario, Canada L0R 1S0 • 905/562-4195 • Fax: 905/562-4618

MODEL 120 HDPW

84" Two Tank with Heavy Duty 36" Prewash
Rack Conveyor High Temperature
Dishwashing Machine

Champion®
The Dishwashing Machine Specialists

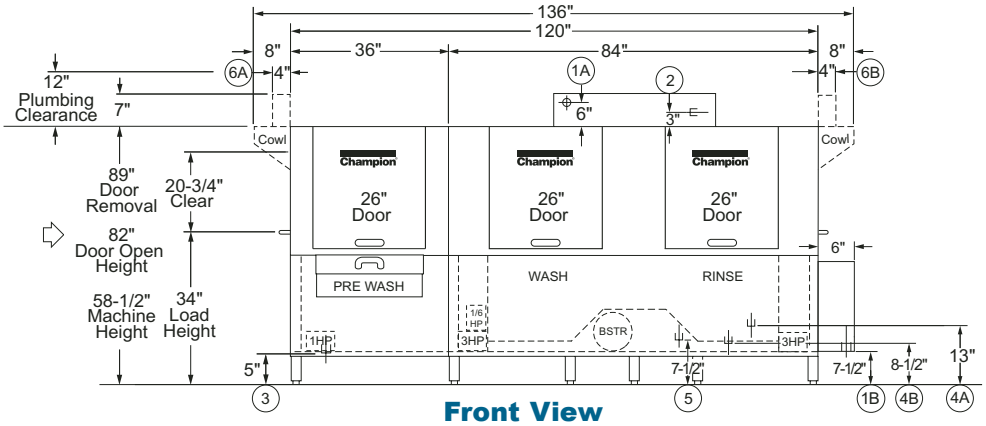

Front View
With Booster

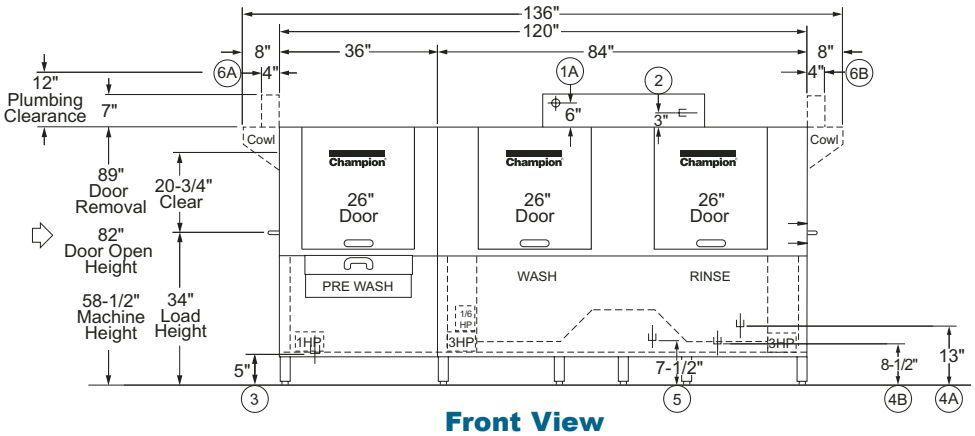

Front View
Without Booster

Left-to-Right Operation

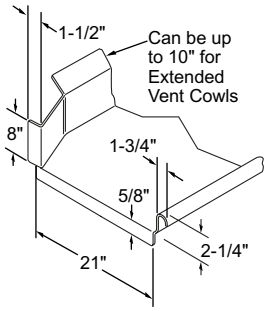

Suggested Table Construction

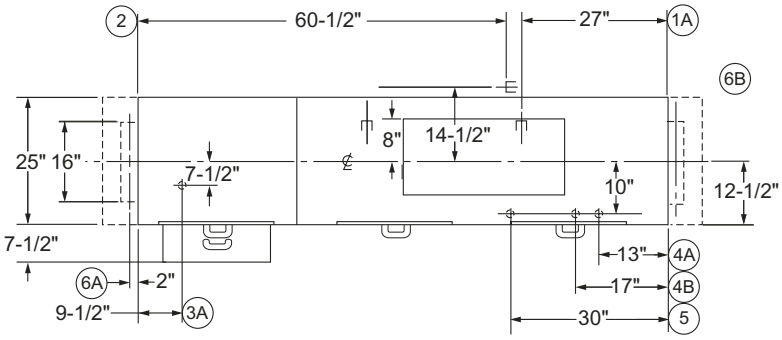

Plan View

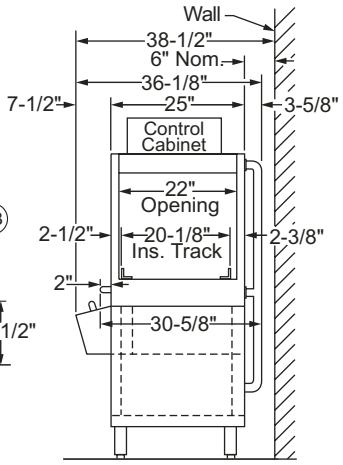

End View

Champion Industries, Inc., P. O. Box 4149, Winston-Salem, NC 27115 • 336/661-1556 • Fax: 336/661-1979 • www.championindustries.com
2674 N. Service Road, Jordan Station, Ontario, Canada L0R 1S0 • 905/562-4195 • Fax: 905/562-4618

MODEL 120 HDPW

84" Two Tank with Heavy Duty 36" Prewash
Rack Conveyor High Temperature
Dishwashing Machine

Champion®
The Dishwashing Machine Specialists

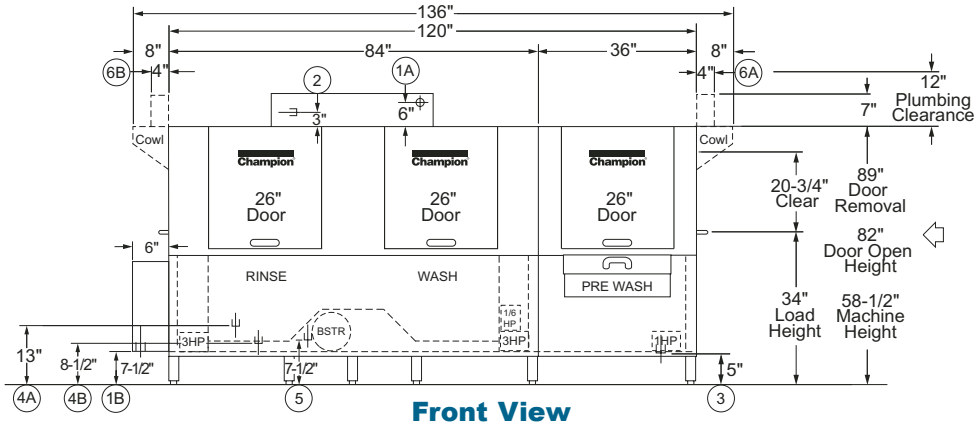

Front View With Booster

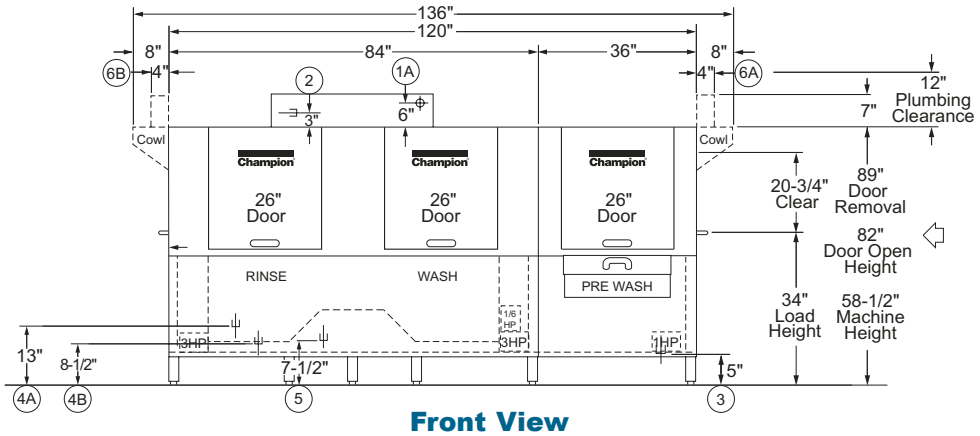

Front View Without Booster

Right-to-Left Operation

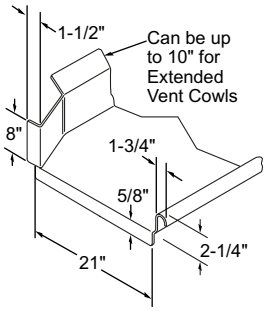

Suggested Table Construction

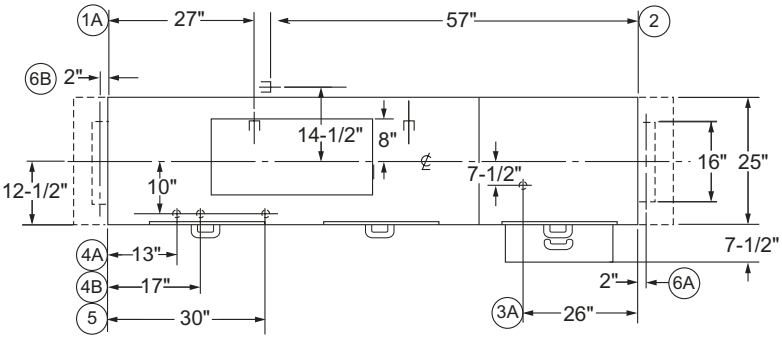

Plan View

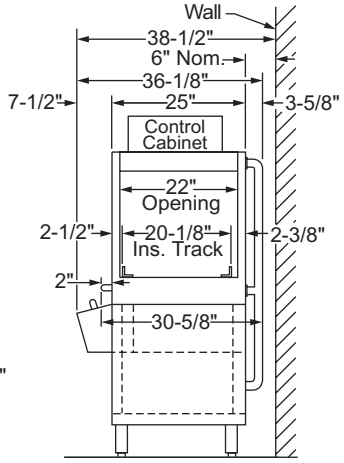

End View

Champion Industries, Inc., P. O. Box 4149, Winston-Salem, NC 27115 • 336/661-1556 • Fax: 336/661-1979 • www.championindustries.com
2674 N. Service Road, Jordan Station, Ontario, Canada L0R 1S0 • 905/562-4195 • Fax: 905/562-4618

MODEL 120 HDPW

84" Two Tank with Heavy Duty 36" Prewash
Rack Conveyor High Temperature
Dishwashing Machine

Champion®
The Dishwashing Machine Specialists

Volume crated: **175 cu. ft.**
Shipping weight crated: **1,000 lbs.**

Dimensions shown in inches

Utilities

1	**Electrical** **A** Machine connection (see Table A) **B** Booster connection (see Table B)
2	**Hot Water** 3/4" NPT 180°F/82°C min. hot water connection. (Machine without booster.) 3/4" NPT 140°F/60°C min. hot water connection. (40°F/22°C rise booster) 3/4" NPT 110°F/49°C min. hot water connection. (70°F/39°C rise booster) Flow pressure 20-22 psi.
3	**Drain** 1-1/2" NPT machine connection. Maximum flow 15 gpm.
4	**Steam** **A** 3/4" NPT machine connection. Flow pressure 15-30 PSI. (Steam coil) **B** 3/4" NPT machine connection. Flow pressure 15-30 PSI. (Steam injector)
5	**Condensate** (no back pressure) 1/2" NPT machine return to boiler
6	**Vents** **A** Load end: 200 CFM @ 1/4" S.P. **B** Unload end: 400 CFM @ 1/4" S.P. (With blower-dryer increase room ventilation by 600 CFM.)

TABLE A - MACHINE CONNECTION

Machine only

Elec. Specs.	Rated Amps	Minimum Supply Ckt. Conductor Ampacity	Maximum Overcurrent Protective Device
208/60/1	171	225	225
240/60/1	150	200	200
208/60/3	95	125	125
240/60/3	83	100	100
480/60/3	41	50	50
575/60/3	32	40	40

TABLE B - BOOSTER CONNECTION

40°F/22°C Rise – 15kW
Electric built-in booster (booster only)

Elec. Specs.	Rated Amps	Minimum Supply Ckt. Conductor Ampacity	Maximum Overcurrent Protective Device
208/60/3	42	50	50
240/60/3	36	45	45
480/60/3	18	25	25
575/60/3	15	20	20

70°F/39°C Rise – 24kW
Electric built-in booster (booster only)

Elec. Specs.	Rated Amps	Minimum Supply Ckt. Conductor Ampacity	Maximum Overcurrent Protective Device
208/60/3	67	80	80
240/60/3	58	70	70
480/60/3	29	35	35
575/60/3	24	30	30

Machine and steam built-in booster

Elec. Specs.	Rated Amps	Minimum Supply Ckt. Conductor Ampacity	Maximum Overcurrent Protective Device
208/60/1	41	50	50
240/60/1	36	50	50
208/60/3	20	25	25
240/60/3	17	25	25
480/60/3	9	15	15

SPECIFICATIONS

Capacity

Racks per hr. (NSF rated)	356
Wash tank (US gal.)	21
Conveyor speed (ft/min.)	9.9

Motor Horsepower

Drive	1/6
Prewash	1
Wash 3	
Rinse 3	

Water Consumption

US Gal. per hr. (max. use)	131
US Gal. per rack	.37

Heating

Tank Heat, electric (kW)	25
Tank heat, steam (lbs/hr. required at 15 PSI flow pressure)	75
Electric booster (built-in) (kW supplied for 40°F rise)	15
Electric booster (kW supplied for 70°F rise)	24
Steam booster (lbs./hr. required for 40°F rise)	75
Steam booster (lbs./hr. required for 70°F rise)	120

Venting

Load end (minimum CFM)	200
Unload end (minimum CFM)	400

Standard 20" x 20" rack complement

Peg	2
Flat	1

Warning: Plumbing and electrical connections should be made by qualified personnel who will observe all the applicable plumbing, sanitary, safety codes and the National Electrical Code.

Note: Water Hammer Arrestor (meeting ASSE-1010 standard or equivalent) to be supplied (by others) in common water supply line at service connection.

Plumbing Notes: Because of the variation in house-supplied steam and water pressures, steam and water pressure regulating valves (PRVs) may be needed. (Water PRV is standard on machines with booster.) The PRVs can either be purchased from Champion or obtained locally.

Venting Notes: Fabricated duct size:
3-7/8" x 15-7/8" (Outside dimensions)

Due to an ongoing value analysis program at Champion, specifications contained in this catalog are subject to change without notice.

Champion Industries, Inc., P. O. Box 4149, Winston-Salem, NC 27115 • 336/661-1556 • Fax: 336/661-1979 • www.championindustries.com
2674 N. Service Road, Jordan Station, Ontario, Canada L0R 1S0 • 905/562-4195 • Fax: 905/562-4618