Champion®

The Dishwashing Machine Specialists

Project _____
Item No. _____
Quantity _____

UL-100 UNDERCOUNTER

STANDARD FEATURES

- Pumped drain
- Door safety switch
- Low-water tank heat protection
- Built-in detergent, rinse-aid, and sanitizer dispensing pumps
- Wash pump, 1-Hp motor
- Fill and dump
- Electric tank heater
- Upper & lower interchangeable wash/rinse spray arms
- Top mounted controls
- Stainless steel top and side panels
- Single phase connection
- Stainless steel construction
- One year parts and labor warranty

UL-100

Low Temperature
Undercounter
Dishwashing Machine

NEW!

OPTIONS & ACCESSORIES

☐ **1-RDT Dish Table** Durable, heavy-gauge stainless steel dish table with sink, stand-pipe drain, removable scrap screen holder, drain-board, backsplash and lower storage cabinet. Sprayhose is optional. See 1-RDT catalog sheet)
Specify right hand or left hand sink.

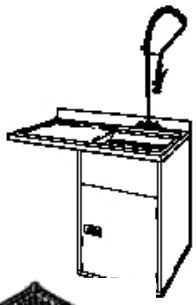

☐ **Additional Dish Racks**

☐ **17" Stand**
Stainless Steel

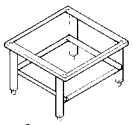

☐ **6" Leg Stand**

☐ **17" Storage Cabinet**

Peg

Flat

SPECIFIER STATEMENT

Specified unit will be Champion model UL-100 undercounter low temperature dishwashing machine with built-in detergent, rinse-aid, and sanitizer dispensing pumps.

Features 141 second total cycle, 1 Hp pump motor, fill and dump, pumped drain. Constructed of stainless steel.

1 year parts and labor warranty.

Champion Industries, Inc.
P. O. Box 4149, Winston-Salem, NC 27115
Tel: 336/661-1556 Fax: 336/661-1979
www.championindustries.com

CH085
(2M) 9/07 Printed in U.S.A.

UL-100 UNDERCOUNTER

UL-100

Low Temperature
Undercounter
Dishwashing Machine

Champion®
The Dishwashing Machine Specialists

Dimensions shown in inches

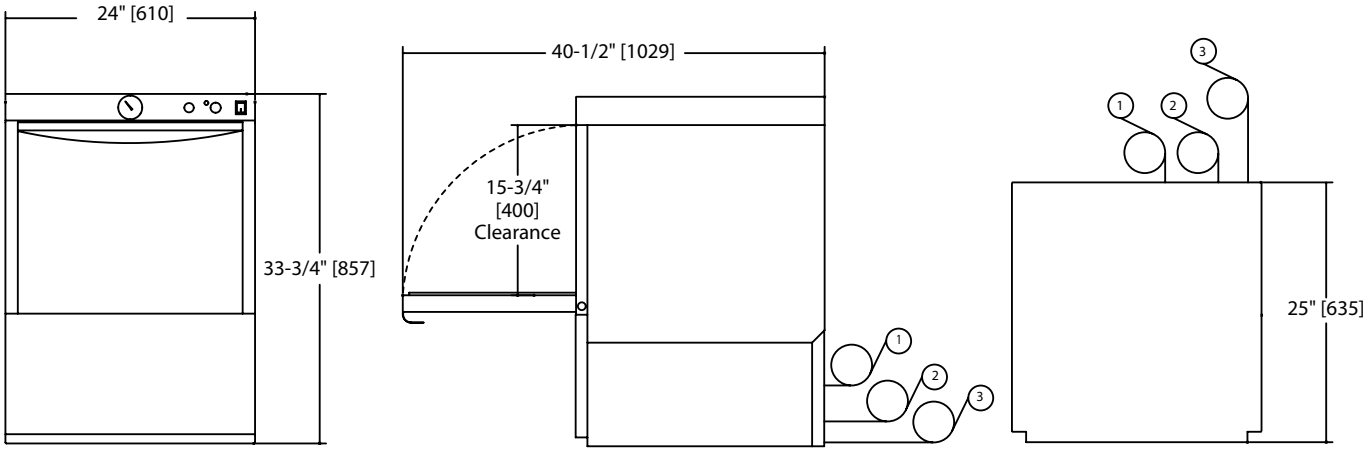

Front View **Side View** **Plan View**

Utilities

1	**Electrical** 115/60/1; 12-amp draw; to be fused at 15 amp. 4 ft. plug-in cord supplied.
2	**Water connection** 140°F/60°C minimum hot water connection; 6 ft. long, 1/2" I.D. flexible fill hose with 3/4" hose connector. Flow pressure: 25-95 psi.
3	**Pumped Drain** 5/8" I.D. flexible reinforced hose, 6 ft. long. Max. drain flow 15 US gpm. Max. drain height 3 ft.

	Uncrated	Crated
Height*	33-3/4"	39-1/2"
Width	24"	25"
Depth	25"	25-1/2"
Ship Wt. lbs/kg	153	173

* Front leveling feet provided.

Warning Plumbing and electrical connections should be made by qualified personnel who will observe all the applicable plumbing, sanitary and safety codes and the National Electrical Code.

SPECIFICATIONS

Capacity	
Racks per hr. (NSF rated)	21
Motor horsepower	
Wash	1
Water consumption	
U.S. Gal. per hr. (Max. use)	38.4
U.S. Gal. per rack	1.8
Temperatures °F/°C	
Wash	140/60
Rinse	140/60
Heating	
Tank heat, electric (kW)	.75
Time cycle in seconds	
Wash	90
Rinse	26
Drain/fill	25
Total cycle	141
Standard 20" x 20" rack complement	
Dish	1
Open	1