Champion®

The Dishwashing Machine Specialists

Project _____

Item No. _____

Quantity _____

MODEL SD-36 WASHER

STANDARD FEATURES

- Fresh water sanitizing rinse
- Front-loading, split door design for easy loading and unloading
- Specialized racking system designed to hold your specific items
- External rinse hose and spray gun
- High velocity stainless steel, spray nozzles
- Self-contained water heating by electric, infrared gas or steam
- Moisture resistant control gauges
- Recirculating wash water
- Removable dual filtration system
- Generous 36 pan capacity
- Heavy-duty stainless steel construction
- One-year parts and labor warranty

MODEL SD-36

Universal Pan and Rack Washer

OPTIONS

Additional Panwasher and Rackwasher Models:

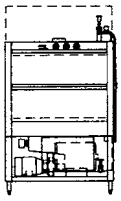

☐ SD-20

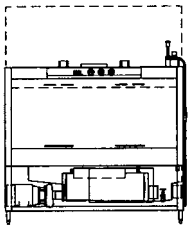

☐ LD-36

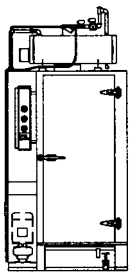

☐ 1527

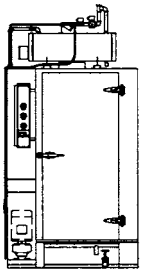

☐ 1536

SPECIFIER STATEMENT

Specified unit will be Champion Industries model SD-36 pot, pan and utensil washer.

Features include split door design, 15 Hp pump, 36 pan capacity, push button control and information center, stainless steel V jets, recirculating wash water and 5 minute wash/rinse cycle.

1 year parts and labor warranty.

Champion Industries, Inc.
P. O. Box 4149, Winston-Salem, NC 27115
Tel: 336/661-1556 Fax: 336/661-1979

2674 N. Service Road,
Jordan Station, Ontario, Canada L0R 1S0
Tel: 905/562-4195 Fax: 905/562-4618

www.championindustries.com

DG010

(1M) 4/08 Printed in U.S.A.

MODEL SD-36 WASHER

MODEL SD-36

Universal Pan
and Rack Washer

Champion®
The Dishwashing Machine Specialists

Dimensions shown in inches

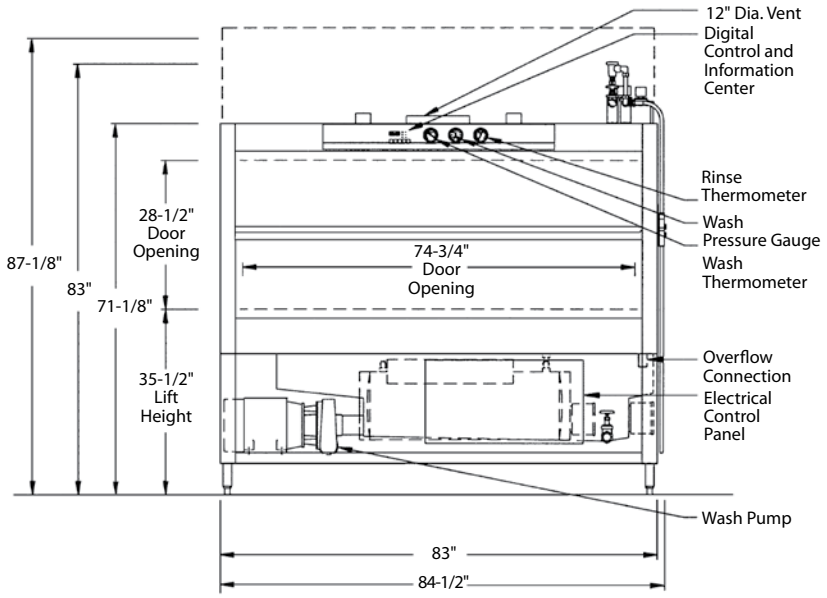

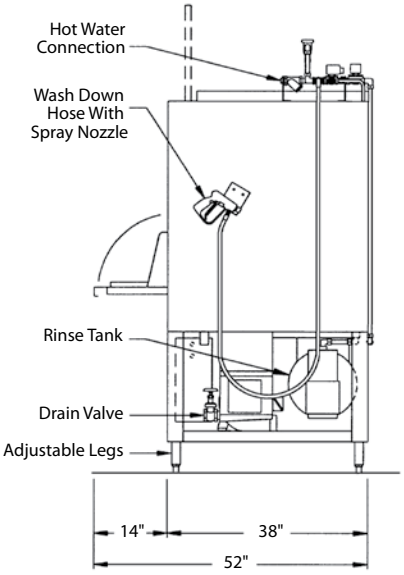

SPECIFICATIONS

Machine Construction
12, 14, 16 & 18 gauge stainless steel. All seams are tig-welded.

Door
Stainless steel, split door design. The top half rises while the lower half folds down to provide a load/unload table.

Spray Arm Assembly
Water driven stainless steel spray arm assemblies, with stainless steel jets, removable end caps and hand-operated quick release mechanism for easy cleaning and reassembly.

Filter
Perforated, removable, stainless steel baskets.

Water Pump
15 Hp, 208/240 or 480 volt, 3 phase, 60 cycle with output of 250 gallons per minute at 35 to 45 P.S.I.

Digital Control & Information Center
110 volt control circuit with push pad operation of "power on", "stop" and "short, medium or long wash cycles". A digital display indicates "time remaining" for each cycle. LED's indicate wash, rinse and unload functions. A buzzer is also included to provide an audible indication of time to unload. A pre-programmed circuit board allows the push pad to be used as a "diagnostic center" by displaying "error codes" for ease of troubleshooting.

Gauges
Moisture resistant gauges measure Wash Temperature, Wash Pressure and Rinse Temperature.

Wash Tank
Stainless steel with electric, infrared gas, steam or steam coil heating, thermostatically controlled, low water protected, sloped to drain with a 65-gallon capacity.

Rinse Tank
Stainless steel with 18 Kw 208/240 or 480 electric, infrared gas or steam coil booster heater to provide 180°F/190°F hot sanitizing rinse.

Racks
Stainless steel rod, built to match specific washing requirements.

Due to an ongoing value analysis program at Champion, specifications contained in this catalog are subject to change without notice.
'USGBC' and related logo is a trademark owned by the U.S. Green Building Council and is used by permission.

Champion Industries, Inc., P. O. Box 4149, Winston-Salem, NC 27115 • 336/661-1556 • Fax: 336/661-1979 • www.championindustries.com
2674 N. Service Road, Jordan Station, Ontario, Canada L0R 1S0 • 905/562-4195 • Fax: 905/562-4618

Champion®

The Dishwashing Machine Specialists

SPECIFICATIONS MODEL SD-36 POT, PAN & UTENSIL WASHER

Cabinet	83" wide x 38" deep x 71-1/8" high. Overall height with door open: 87-1/8" (106-1/2" with optional infrared gas heated rinse tank). Door opening: 74-3/4" wide x 28-1/2" high. Constructed of 12, 14 & 16 gauge, type 304 #3 finish, stainless steel. All seams tig-welded, cleaned and polished.
Door	Front-loading, split door design for easy loading and unloading. The top half of the door system rises while the lower half folds down to create a space saving drain table. Door is interlocked with limit switch to prevent machine operation while door is open. Door construction: 16 gauge, type 304 #3 finish, stainless steel.
Recirculating Wash Tank	Heated by one 18 kW 208/240 at 480 volt electric immersion heaters, thermostatically controlled wash temperature and low water protection system. 65 gallons, 14 gauge stainless steel, sloped to drain. Infrared gas and steam heating options available.
Wash Tank Filter	Perforated, stainless steel basket type designed for increased effectiveness and easy cleaning without emptying wash tank.
Wash Tank Fill Valve	Size 1/2" brass material, solenoid type, automatic.
Wash Tank Drain Valve	Size 1-1/4" brass material, gate type for manual or electrically operated ball valve for automatic option.
Wash Pump	15 HP, 208/240 or 480 volt, 3 phase, 60 cycle. Close coupled; 250 gallons per minute at 35 to 45 psi, mounted on 12 gauge stainless steel formed channel base.
Spray Arm Assemblies	Water driven stainless steel spray arm assemblies, with stainless steel jets, removable end caps and hand-operated quick release mechanism for easy cleaning and reassembly.
Sanitizing Rinse Tank	Stainless steel, 20 gallon capacity, with one (1) 18 kW 208/240 or 480 volt electric booster heater to provide 180°/190°F hot sanitizing rinse. Uses 12 gallons per 30 second cycle. Infrared gas and steam coil heating options available as well as pumped rinse systems.
Rinse Supply Valve	Size 1" brass material, solenoid type, automatic.
Final Rinse Piping	Type 304 stainless steel tubing with brass compression fittings and brass or piping optional stainless steel full cone rinse jets.
Control and Information Center	120 volt control circuit with push pad operation of “Power On,” “Stop” and “Short, Medium or Long Wash Cycles.” A digital display indicates “Time Remaining” for each cycle. LED’s indicate wash, rinse and unload functions. A buzzer is also included to provide an audible indication when the machine is ready to unload. A pre-programmed circuit board allows the push pad to be used as a “Diagnostic Center” by displaying “Error Codes” for ease of troubleshooting. Moisture resistant gauges measure Wash Temperature, Wash Pressure and Rinse Temperature.
External Rinse Hose	Externally mounted rinse hose for easy cleaning and maintenance of machine.
Steam Exhaust Vent	Steam exhaust vent 12-7/8" diameter, consisting of 14 gauge rolled collar for PVC pipe connection bolted to the top of the machine. Machine pre-wired with control timer for the addition of a fan

2674 N. Service Road,
Jordan Station, Ontario, Canada L0R 1S0
Tel: 905/562-4195 Fax: 905/562-4618

Champion Industries, Inc.
P. O. Box 4149, Winston-Salem, NC 27115
Tel: 336/661/1556 Fax: 336/661-1979
www.championindustries.com

Champion®

The Dishwashing Machine Specialists

SPECIFICATIONS MODEL SD-36 POT, PAN & UTENSIL WASHER

Optional Exhaust Fan

12" diameter exhaust fan constructed for moisture laden air or other air stream contaminants. 500 CFM @ .5" static pressure. 1/4 HP, 1725 RPM.

Racks

Customized to hold your specific items. Standard bakery racks include utensil basket with hold-down lid and bun/sheet pan insert designed to hold ten pans, constructed of stainless steel rod, mig-welded.

Connections

Water Inlet: 120 °F, 1" NPT
Water Drain and Overflow: 1-1/4" NPT
Electrical: Two point connection through knock out on electrical enclosure.
Steam Heating Option: 1/2" NPT
Natural or Propane Gas Heating Option: 1/2" NPT

Weight

Crated: 2,000 lbs.
Uncrated: 1,600 lbs.

NOTE: All weights are approximate. Weights will vary depending on the number of options included with the machine.

Services

120 Volt -1 phase, 5 running amps, 15 amp service, plus one of the following:

	Running Amps		
Elec. Spec.	**Electric Wash Electric Booster**	**Steam Wash[1] Steam Booster**	**Infrared Gas Wash[2] Infrared Gas Booster**
208 Volt 3 phase	138	39	38
240 Volt 3 phase	126	37	36
480 Volt 3 phase	63	16	18

[1] Steam Supply: Consumption: 170 lbs./hr. @ 15 psi minimum
[2] Gas Supply: Consumption: 120,000 BTU/hr. @ 1/2 lb. pressure maximum

Certifications

UL and UL Sanitation Listed (all). CUL Listed (electric and steam only).

2674 N. Service Road,
Jordan Station, Ontario, Canada L0R 1S0
Tel: 905/562-4195 Fax: 905/562-4618

Champion Industries, Inc.
P. O. Box 4149, Winston-Salem, NC 27115
Tel: 336/661/1556 Fax: 336/661-1979
www.championindustries.com

(1M) 4/08 Printed in U.S.A.