Champion®

The Dishwashing Machine Specialists

Project _____

Item No. _____

Quantity _____

MODEL 1536-N WASHER

STANDARD FEATURES

- Heavy-duty stainless steel construction
- Self contained water heater
- Removable filter basket
- Electrical control box
- Wash/rinse cycle 5 minutes
- Automatic fill
- Wash cycle selection switch
- Loading ramp up to 8" long or pit grid
- Adjustable wash and rinse cycles
- Electric, infrared gas or steam heating
- Digital control & information center
- Recirculating wash water
- Freshwater sanitizing rinse
- Easy to clean, dual filtration system
- Moisture resistant control gauges

MODEL 1536-N

Pot, Pan and
Utensil Washer

OPTIONS

- ☐ 2nd door and extended cabinet for pass through operation
- ☐ External wash down hose
- ☐ Autodrain
- ☐ Steam extraction fan
- ☐ Fold-away ramp system
- ☐ Additional racks

SPECIFIER STATEMENT

Specified unit will be Champion Industries model 1536-N pot, pan and utensil washer.

Features include four rotating hubs fitted with jet arms and high-velocity, fast cutting spray nozzles, wash/rinse cycle of 5 minutes, self contained water heater, fresh water sanitizing rinse, moisture resistant control gauges, and removable filter baskets.

1 year parts and labor warranty.

Champion Industries, Inc.
P. O. Box 4149, Winston-Salem, NC 27115
Tel: 336/661-1556 Fax: 336/661-1979

2674 N. Service Road,
Jordan Station, Ontario, Canada L0R 1S0
Tel: 800/263-5798 Fax: 905/562-4618

www.championindustries.com

DG013

(1M) 12/08 Printed in U.S.A.

MODEL 1536-N WASHER

MODEL 1536-N

Pot, Pan and
Utensil Washer

Champion®
The Dishwashing Machine Specialists

Dimensions shown in inches

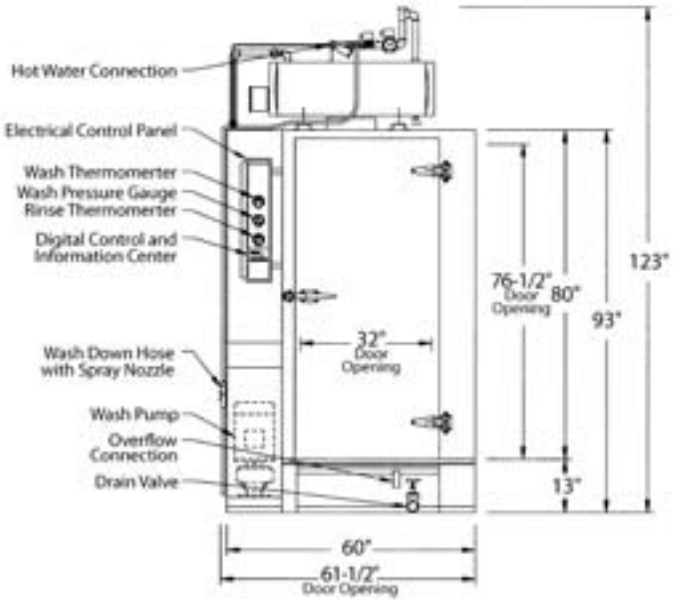

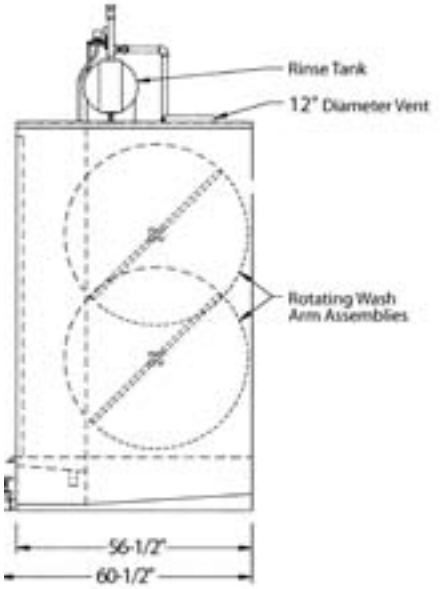

SPECIFICATIONS

Machine Construction
12, 14, & 16 gauge stainless steel. All seams Heliarc welded.

Door
Double skinned stainless steel with exterior latch and inside release handle.

Spray Arm Assembly
Water driven, stainless steel spray arm assembly with stainless steel jets, removable end caps and hand operated quick release mechanism for easy cleaning and reassembly. Mounted on stainless steel base.

Filter
Perforated stainless steel screen type. Double filtration system for increase effectiveness and easy cleaning without emptying tank.

Water Pump
15 Hp, 208/240/480 volt, 3 phase, 60 cycle with output of 250 gallons per minute at 35 to 45 P.S.I.

Digital Control & Information Center
120 volt control circuit with push pad operation of "Power On", "Stop" and "Short, Medium or Long Wash Cycles". A digital display indicates "TIME REMAINING" for each cycle. LED's indicate wash, rinse and unload functions. A buzzer is also included to provide an audible indication of time to unload. A pre-programmed circuit board allows the push pad to be used as a "Diagnostic Center" by displaying "Error Codes" for ease of troubleshooting.

Gauges
Special moisture gauges measure wash temperature, and rinse temperature, wash jet pressure.

Wash Tank
Stainless steel with electric, infrared gas, steam or steam coil heating, thermostatically controlled, low water protected, sloped to drain with a 90-gallon capacity.

Racks
Stainless steel built to match specific washing requirements.

Due to an ongoing value analysis program at Champion, specifications contained in this catalog are subject to change without notice.
Champion Industries, Inc., P. O. Box 4149, Winston-Salem, NC 27115 • 336/661-1556 • Fax: 336/661-1979 • www.championindustries.com
2674 N. Service Road, Jordan Station, Ontario, Canada L0R 1S0 • 800/263-5798 • Fax: 905/562-4618