Champion®

The Dishwashing Machine Specialists

Project _____

Item No. _____

Quantity _____

SD-10 UTENSIL WASHER

MODEL SD-10

Pot, Pan and Utensil Washer

STANDARD FEATURES

- Heavy-duty stainless steel construction
- Front-loading, split door design
- Separate wash and rinse tanks
- External pre-rinse and wash down hose
- Self-contained water heating
- Moisture resistant control gauges
- Recirculating wash water
- Maintenance free hub system
- Adjustable wash and rinse cycles
- Easy to remove, filter basket
- Digital Control & Information Center
- Flexible racking system
- Electric, steam or infrared gas water heating
- Automatic fill
- Rinse tank and booster heater
- Stainless steel utensil rack with a hold-down lid and one insert
- One-year parts and labor warranty

OPTIONS

Additional Lift Door and Split Door Models:

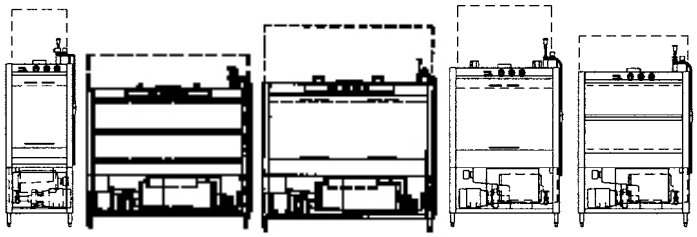

☐ LD-10 ☐ SD-36 ☐ LD-36 ☐ LD-20 ☐ SD-20

SPECIFIER STATEMENT

Specified unit will be Champion Industries model SD-10 pot, pan and utensil washer.

Features include split door design, 5 Hp pump, 10 pan capacity, push button control and information center, recirculating wash water and 5 minute wash/rinse cycle.

1 year parts and labor warranty.

Champion Industries, Inc.
P. O. Box 4149, Winston-Salem, NC 27115
Tel: 336/661-1556 Fax: 336/661-1979

2674 N. Service Road,
Jordan Station, Ontario, Canada L0R 1S0
Tel: 905/562-4195 Fax: 905/562-4618

www.championindustries.com

DG004

(1M) 10/08 Printed in U.S.A.

SD-10 UTENSIL WASHER

SD-10

Pot, Pan And Utensil Washer

Champion®

The Dishwashing Machine Specialists

Dimensions shown in inches

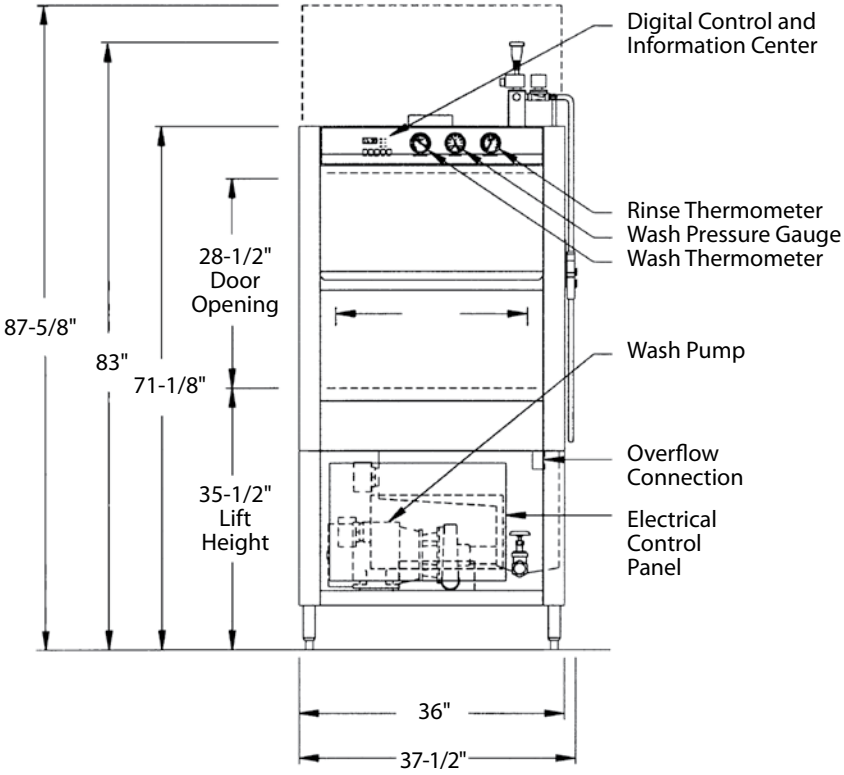

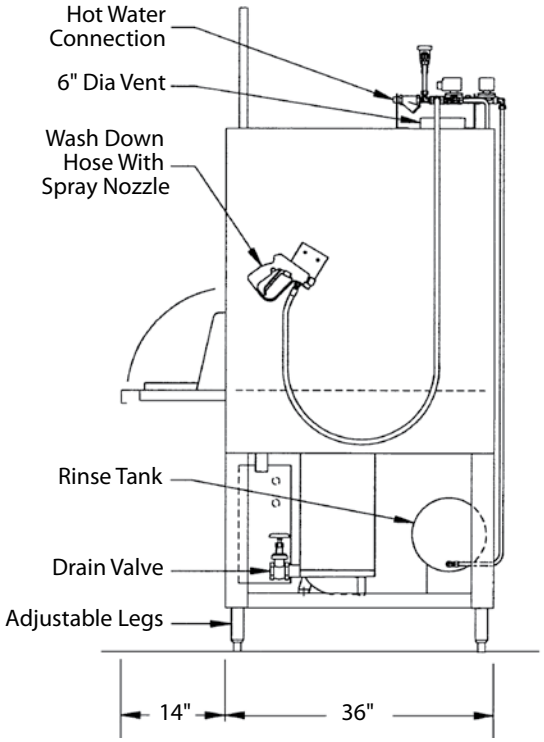

SPECIFICATIONS

Machine Construction
12, 14, & 16 gauge Stainless steel.

Door
Stainless steel, split door design. Top half rises, lower folds down to load/unload table.

Rotating Wash, Hub & Spray Arm Assembly
Water driven, stainless steel spray arm assembly with stainless steel jets, removable end caps and hand operated quick release mechanism for easy cleaning and reassembly. Mounted on stainless steel base.

Filter
Perforated, removable, stainless steel basket.

Water Pump
5 Hp, 208/240 or 440/480 volt, 1 phase or 3 phase, 60 cycle with output of 100 gpm at 35 to 45 PSI.

Digital Control & Information Center
110 volt control circuit, push pad operation "Power On", "Stop" and "Short, Medium, or Long Wash Cycles". Digital display indicates "Time Remaining" for cycle. LED's indicate wash, rinse & unload functions. Buzzer provides indication to unload. A pre-programmed circuit board controller allows push pad to be used as a "Diagnostic Center". Displays "Error Codes" for troubleshooting.

Gauges
Wash temperature, rinse temperature, wash jet pressure. Special moisture resistant design.

Wash Tank
Stainless steel with electric, infrared gas, steam or steam coil heating, thermostatically controlled, low water protected, sloped to drain with a 25-gallon capacity.

Rinse Tank
Stainless steel with electric, infrared gas or steam coil booster heater provides 180°/190° hot sanitizing rinse.

Racks
Stainless steel rod, built to match specific washing requirements.

Due to an ongoing value analysis program at Champion, specifications contained in this catalog are subject to change without notice.
'USGBC' and related logo is a trademark owned by the U.S. Green Building Council and is used by permission.

Champion Industries, Inc., P. O. Box 4149, Winston-Salem, NC 27115 • 336/661-1556 • Fax: 336/661-1979 • www.championindustries.com
2674 N. Service Road, Jordan Station, Ontario, Canada L0R 1S0 • 905/562-4195 • Fax: 905/562-4618

Champion®

The Dishwashing Machine Specialists

SPECIFICATIONS MODEL SD-10 POT, PAN & UTENSIL WASHER

Washer	Automatic washing machine designed to wash all pots, pans and utensils commonly used in baking and cooking operations.
Cabinet	36" wide x 36" deep x 83" high. Clearance height: 87-5/8" (96-1/8" with optional infrared gas heated rinse tank). Door opening: 26" wide x 28-1/2" high. Wash chamber: 24-3/8" wide x 27-3/8" deep x 28-1/2" high. Constructed of #12, #14 and #16 gauge, type 304 #3 finish stainless steel. All seams tig-welded, cleaned inside, cleaned and buffed outside.
Door	Front-loading, hinged door design for easy loading and unloading. The top half of the door system rises while the lower half folds down to create a space saving drain table. Door is interlocked with limit switch to prevent machine operation while door is open. Door construction: 16 gauge, type 304 #3 finish, stainless steel.
Recirculating Wash Tank	Heated by two (2) 6 kW 208/240 at 480 volt electric immersion heaters, thermostatically controlled wash temperature and low water protection system. 25 gallons, 14 gauge stainless steel, sloped to drain. Infrared gas and steam heating options available.
Wash Tank Filter	Perforated, stainless steel basket type. Double filter system for increased effectiveness and easy cleaning without emptying wash tank.
Wash Tank Fill Valve	Size 1/2" brass material, solenoid type, automatic.
Wash Tank Drain Valve	Size 1-1/4" brass material, gate type for manual or electrically operated ball valve for automatic option.
Wash Pump	Wash pump with 5 H.P. ODP motor, (optional TEFC or wash down duty motors available) 208/240 or 480 volt, 3 phase or 1 phase, 60 cycle. Rated for 100 gallons per minute at 35 to 45 PSI. Mounted on #12 gauge stainless steel formed channel base. Close coupled centrifugal pump, bronze fitted with cast iron casing. Optional stainless steel wet end available.
Rotating Wash Hub & Spray Arm Assembly	Water driven, stainless steel spray arm assembly with stainless steel jets, removable end caps and hand operated quick release mechanism for easy cleaning and reassembly. Mounted on stainless steel base.
Sanitizing Rinse Tank	Stainless steel, 6 gallon capacity, with one 6 kW 208/240 or 480 volt electric booster heater to provide 180°/190°F hot sanitizing rinse. Uses 2.8 gallons per 22 second cycle. Infrared gas and steam coil heating options available.
Rinse Supply Valve	Size 1/2" brass material, solenoid type, automatic.
Final Rinse Piping	Type 304 stainless steel tubing with brass compression fittings and brass or optional stainless steel full cone rinse jets.
Control and Information Center	120 volt control circuit with push pad operation of “power on,” “stop” and “short, medium or long wash cycles.” A digital display indicates “time remaining” for each cycle. LED’s indicate wash, rinse and unload functions. A buzzer is also included to provide an audible indication of time to unload. A pre-programmed circuit board allows the push pad to be used as a “Diagnostic Center” by displaying “Error Codes” for ease of troubleshooting. Moisture resistant gauges measure temperature and pressure for recirculated wash and final rinse. NOTE: Optional NEMA 4x stainless steel panel with push button control and internal adjustable timers is available in lieu of digital push pad operation.
Wash Down Spray Hose	Externally mounted spray hose with insulated handle for pre-rinse of heavily soiled items and easy cleaning and maintenance of machine.
Steam Exhaust Vent	Steam exhaust vent 6-3/4" I.D., consisting of 16 gauge rolled collar for PVC pipe connection bolted to the top of the machine. Machine pre-wired with control timer for the addition of a fan.

2674 N. Service Road,
Jordan Station, Ontario, Canada L0R 1S0
Tel: 905/562-4195 Fax: 905/562-4618

Champion Industries, Inc.
P. O. Box 4149, Winston-Salem, NC 27115
Tel: 336/661/1556 Fax: 336/661-1979
www.championindustries.com

Champion®

The Dishwashing Machine Specialists

SPECIFICATIONS MODEL SD-10 POT, PAN & UTENSIL WASHER

Optional Exhaust Fan

Side-mounted exhaust fan constructed for moisture laden air or other air stream contaminants. Maximum temperature 250°F, 300 CFM @ .05" static pressure. 1/10 Hp, 110 volt motor, 1550 RPM.

Electric Enclosure

Electrical control panel is NEMA 12 stainless steel or optional NEMA 4X stainless steel with Square "D" components.

Racks

Customized to hold your specific items. Standard bakery racks include utensil rack with hold-down lid and bun/sheet pan insert designed to hold ten pans, constructed of stainless steel rod, mig welded.

Connections

Water Inlet: 120°F, 3/4" NPT
Water Drain and Overflow: 1-1/4" NPT
Electrical: Two point connection through knock out on electrical enclosure.
Steam Heating Option: 1/2" NPT
Steam Condensate: 1/2" NPT
Natural or Propane Gas Heating Option: 1/2" NPT, 14" W.C. maximum inlet pressure.

Weight

Crated: 800 lbs. Uncrated: 600 lbs.

NOTE: All weights are approximate. Weights will vary depending on the number of options included with the machine.

Services

120 Volt -1 phase, 5 running amps, 15 amp service, plus one of the following:

	Running Amps		
Elec. Spec.	**Electric Wash Electric Booster**	**Steam Wash[1] Steam Booster**	**Infrared Gas Wash[2] Infrared Gas Booster**
208 Volt 3 phase	63	14	14
240 Volt 3 phase	57	12	12
480 Volt 3 phase	29	6	6

[1] Steam Supply: Consumption: 160 lbs./hr. @ 15 psi minimum
[2] Gas Supply: Consumption: 120,000 BTU/hr. @ 1/2 lb. pressure maximum

Certifications

UL and UL Sanitation Listed (all). CUL Listed (electric and steam only).

2674 N. Service Road,
Jordan Station, Ontario, Canada L0R 1S0
Tel: 905/562-4195 Fax: 905/562-4618

Champion Industries, Inc.
P. O. Box 4149, Winston-Salem, NC 27115
Tel: 336/661/1556 Fax: 336/661-1979
www.championindustries.com

(1M) 5/08 Printed in U.S.A.