Champion®

The Dishwashing Machine Specialists

Project _____

Item No. _____

Quantity _____

MODEL 1527-N WASHER

STANDARD FEATURES

- Heavy-duty stainless steel construction
- Recirculation wash water
- Self-contained water heating
- Fresh water sanitizing rinse
- Adjustable wash and rinse cycles
- Easy to clean, dual filtration system
- Electric, infrared gas or steam heating
- Moisture resistant control gauges
- Designed for pit or ramp installations
- Digital Control & Information Center
- One-year parts and labor warranty

MODEL 1527-N

Rack, Pan and Utensil Washer

OPTIONS

Additional Panwasher and Rackwasher Models:

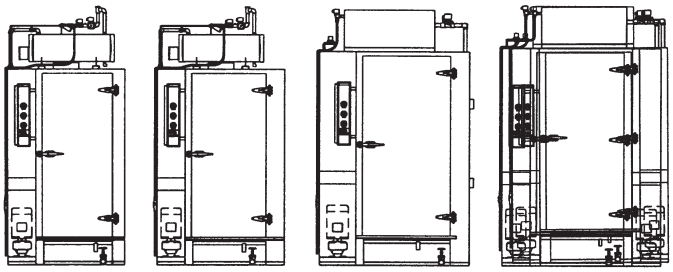

☐ SD-36 ☐ 1536-N ☐ 2554 ☐ 3072

Champion Industries, Inc.
P. O. Box 4149, Winston-Salem, NC 27115
Tel: 336/661-1556 Fax: 336/661-1979

2674 N. Service Road,
Jordan Station, Ontario, Canada L0R 1S0
Tel: 905/562-4195 Fax: 905/562-4618

www.championindustries.com

DG012

(1M) 10/06 Printed in U.S.A.

MODEL 1527-N WASHER

MODEL 1527-N

Rack, Pan and
Utensil Washer

Champion®
The Dishwashing Machine Specialists

Dimensions shown in inches

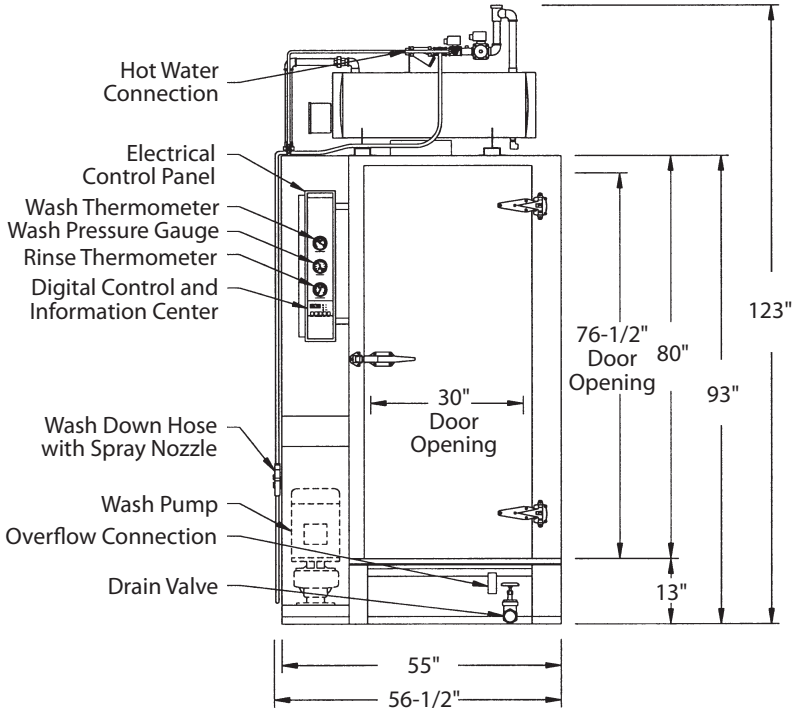

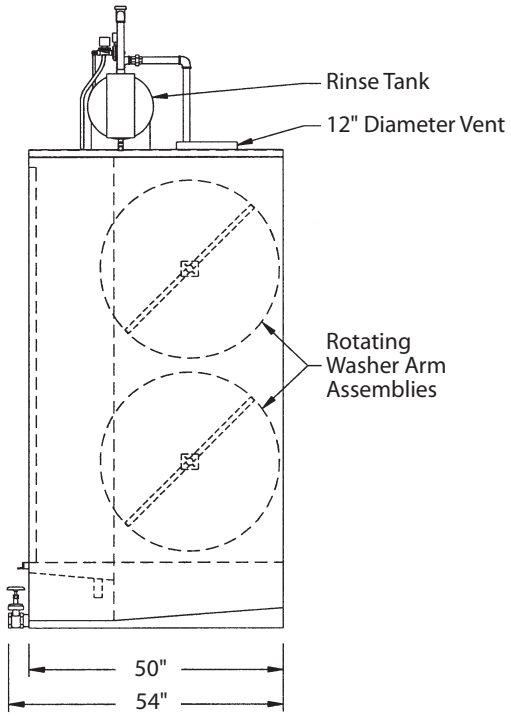

SPECIFICATIONS

Machine Construction
12, 14, & 16 gauge Stainless steel. All seams Heliarc welded.

Door
Double skinned stainless steel with exterior latch and inside release handle.

Spray Arm Assembly
Stainless steel jets, removable end caps and hand operated quick release mechanism for easy cleaning and reassembly.

Filter
Perforated stainless steel screen type. Double filtration system for increased effectiveness and easy cleaning without emptying the tank.

Water Pump
15 Hp, 208/240/480 volt, 3 phase, 60 cycle with output of 250 gallons per minute at 35 to 45 P.S.I.

Digital Control & Information Center
110 volt control circuit with push pad operation of “Power On”, “Stop” and “Short, Medium or Long Wash Cycles”. A digital display indicates “Time Remaining” for each cycle. LED’s indicate wash, rinse and unload functions. A buzzer is also included to provide an audible indication of time to unload. A pre-programmed circuit board allows the push pad to be used as a “Diagnostic Center” by displaying “Error Codes” for ease of troubleshooting.

Gauges
Special moisture resistant gauges measure wash temperature, rinse temperature and wash jet pressure.

Wash Tank
Stainless steel with electric, infrared gas, steam or steam coil heating, thermostatically controlled, low water protected, sloped to drain with a 72-gallon capacity.

Racks
Stainless steel rod built to match specific washing requirements.

Due to an ongoing value analysis program at Champion, specifications contained in this catalog are subject to change without notice.
Champion Industries, Inc., P. O. Box 4149, Winston-Salem, NC 27115 • 336/661-1556 • Fax: 336/661-1979 • www.championindustries.com
2674 N. Service Road, Jordan Station, Ontario, Canada L0R 1S0 • 905/562-4195 • Fax: 905/562-4618

Champion®

The Dishwashing Machine Specialists

SPECIFICATIONS MODEL 1527-N RACK, PAN AND UTENSIL WASHER

Washer	Automatic washing machine designed to wash and sanitize items commonly used in the bakery, meat, poultry, candy and food service industries. Machine is designed to be installed in a pit or used at floor level with a ramping system.
Cabinet	55" wide x 50" deep x 93" high. Clearance height: 123". Standard door opening: 30" wide x 76-1/2" high. Wash chamber: 30" wide x 32" deep x 76-1/2" high. Constructed of 12, 14 & 16 gauge, type 304 #3 finish, stainless steel. All seams tig-welded, cleaned and polished.
Door	Standard right hand or optional left hand swing constructed of 14 and 16 gauge, type 304 #3, stainless steel with integral stainless steel framework. Door double skinned for added strength. Equipped with door latch and inside release handle. Door is interlocked with limit switch to prevent machine operation while open.
Washer Floor	Constructed of 12 gauge stainless steel formed sheets designed to provide maximum strength. Supports constructed of 2" x 2" x 1/4" stainless steel angle.
Recirculating Wash Tank	Heated by 208/240 or 480 volt electric immersion heaters, 18 kW total, thermostatically controlled wash temperature with low water protection system. 72 gallon capacity (64 gallons if infrared gas heated), 14 gauge stainless steel, sloped to drain. Infrared gas and steam heating options available.
Filters	Perforated, stainless steelscreen type. Double filter system for increased effectiveness and easy cleaning without emptying wash tank.
Fill Valve	Size 1/2" brass material, solenoid type for automatic option.
Drain Valve	Size 2" brass material, gate type for manual or electrically operated ball valve for automatic option.
Wash Pump	15 hp, 208/240 or 480 volt, 3 phase, 60 cycle. Close coupled; 250 gallons per minute at 35 to 45 psi, mounted on 12 gauge stainless steel formed channel base.
Rotating Wash Hub & Spray Arm Assembly	Water-driven stainless steel spray arm assembly with stainless steel jets, removable end caps and hand-operated, quick-release mechanism for easy cleaning and reassembly. Mounted on stainless steel base.
Sanitizing Rinse Tank	Stainless steel, 20 gallon capacity, with 208/240 or 480 volt electric booster heaters, 18 kW total, to provide 180°/190°F hot sanitizing rinse. Uses 12 gallons per 30 second cycle. Infrared gas and steam coil heating options available, as well as pumped rinse system.
Rinse Valve	Size 1" brass material, solenoid type, automatic.
Final Rinse Piping	Type 304 stainless steel tubing with brass compression fittings and brass or optional stainless steel full cone rinse jets.
Control and Information Center	110 volt control circuit with push pad operation of “Power On,” “Stop” and “Short, Medium or Long Wash.” A digital display indicates “Time Remaining” for each cycle. LED’s indicate wash, rinse and unload functions. A buzzer is also included to provide an audible indication when the machine is ready to unload. A programmable controller allows the push pad to be used as a “Diagnostic Center” by displaying “Error Codes” for ease of troubleshooting. Moisture resistant gauges measure Wash Temperature, Wash Pressure and Rinse Temperature.
External Rinse Hose	Externally mounted rinse hose with spray gun for easy cleaning and maintenance of machine.

Champion Industries, Inc.
P. O. Box 4149, Winston-Salem, NC 27115
Tel: 336/661/1556 Fax: 336/661-1979
www.championindustries.com

2674 N. Service Road,
Jordan Station, Ontario, Canada L0R 1S0
Tel: 905/562-4195 Fax: 905/562-4618

(1M) 10/06 Printed in U.S.A.

Champion®

The Dishwashing Machine Specialists

SPECIFICATIONS MODEL 1527-N RACK, PAN AND UTENSIL WASHER

Steam Exhaust Vent

Steam exhaust vent 12-7/8" diameter, consisting of 14 gauge rolled rolled for PVC pipe connection bolted to the top of the machine. Machine pre-wired with control timer for the addition of a fan.

Optional Exhaust Fan

12" diameter exhaust fan mounted on washer to extract steam after rinse cycle. Constructed for moisture laden air or other air steam contaminants. 500 CFM @ .5" static pressure. 1/4 Hp, 1725 RPM.

Optional Hood & Fan

Stainless steel hood and fan assembly, mounted over door to evacuate steam that escapes when door is opened.

Racks

Customized to hold your specific items. Constructed of stainless steel rod and formed angle, mig welded. Supplied with stainless steel casters and nylon wheels.

Connections

Water Inlet: 120 degrees F, 1" NPT
Water Drain: 2" NPT
Overflow: 2" NPT
Electrical: Two point connection except 575 volt, which is single point.
Steam Heating Option: 1/2" NPT
Natural or Propane Gas Heating Option: 1/2" NPT

Services

120 Volt — 1 phase, 5 running amps, 15 amp service, plus one of the following (except for 575 volt, which is single point connection):

	Running Amps		
Elec. Spec.	**Electric Wash Electric Booster**	**Steam Wash[1] Steam Booster**	**Infrared Gas Wash[2] Infrared Gas Booster**
208 Volt 3 phase	138	38	38
240 Volt 3 phase	126	36	36
480 Volt 3 phase	63	18	18

1 Steam Supply: Consumption: 175 lbs./hr. @ 15 psi minimum

2 Gas Supply: Consumption: 110,000 BTU/hr.

Certifications

UL and UL Sanitation Listed (all). CUL Listed (electric and steam only).

2674 N. Service Road,
Jordan Station, Ontario, Canada L0R 1S0
Tel: 905/562-4195 Fax: 905/562-4618

Champion Industries, Inc.
P. O. Box 4149, Winston-Salem, NC 27115
Tel: 336/661/1556 Fax: 336/661-1979
www.championindustries.com

(1M) 10/06 Printed in U.S.A.