Champion®

The Dishwashing Machine Specialists

Project _____

Item No. _____

Quantity _____

MODEL 3072 WASHER

STANDARD FEATURES

- Heavy-duty stainless steel construction
- Double-skinned hinged door design
- Standard and custom wash racks
- Choice of tank heat: electric, infrared gas or steam
- Moisture resistant control gauges
- Easy to clean, dual filtration system
- Recirculating wash water
- Two (2) 15 Hp pumps
- Adjustable wash and rinse cycles
- Digital Control & Information Center
- 72 sheet pan capacity
- Fresh water sanitizing rinse
- Designed for pit or ramp installations
- Precision engineered spray arm assembly
- One year parts and labor warranty

MODEL 3072

Cart, Cabinet, Rack
And Pan Washer

(Shown with optional fold-away ramp)

OPTIONS

Additional Panwasher and Rackwasher Models:

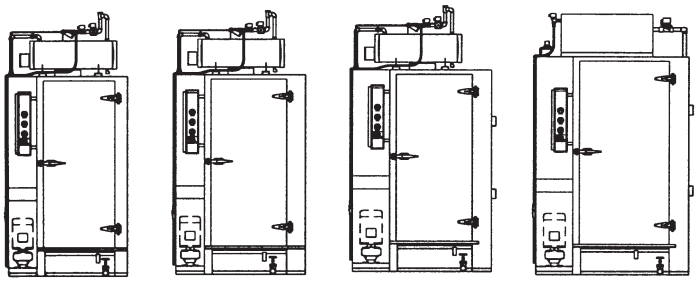

☐ 1527 ☐ 1536 ☐ 2554 ☐ 2566

Champion Industries, Inc.
P. O. Box 4149, Winston-Salem, NC 27115
Tel: 336/661-1556 Fax: 336/661-1979

2674 N. Service Road,
Jordan Station, Ontario, Canada L0R 1S0
Tel: 905/562-4195 Fax: 905/562-4618

www.championindustries.com

DG016

(1M) 10/06 Printed in U.S.A.

MODEL 3072 WASHER

MODEL 3072

Cart, Cabinet,
Rack And Pan
Washer

Champion®
The Dishwashing Machine Specialists

Dimensions shown in inches

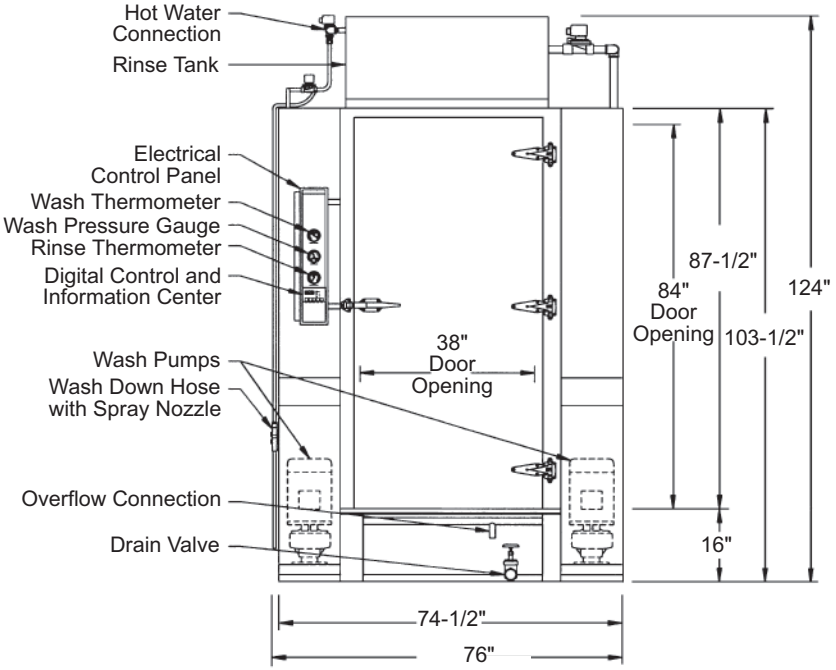

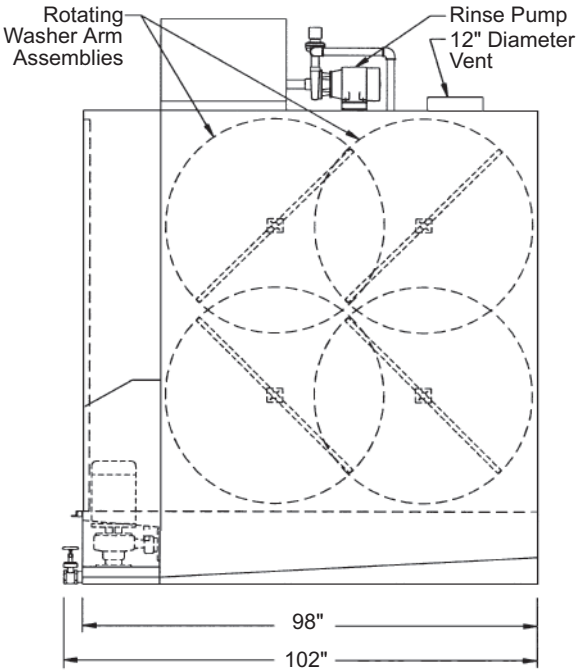

SPECIFICATIONS

Door
Double skinned stainless steel with exterior latch and inside release handle.

Filter
Stainless steel, perforated, screen type.

Water Pump
Two (2) 15 Hp, 208/240/480 volt, 3 phase, 60 cycle with output of 250 gallons per minute at 35 to 45 P.S.I. each.

Digital Control & Information Center
110 volt control circuit with push pad operation of “Power On”, “Stop” and “Short, Medium or Long Wash Cycles”. A digital display indicates “Time Remaining” for each cycle. LED’s indicate wash, rinse and unload functions. A buzzer is also included to provide an audible indication of time to unload. A pre-programmed circuit board allows the push pad to be used as a “Diagnostic Center” by displaying “Error Codes” for ease of troubleshooting.

Gauges
Special moisture resistant gauges measure wash temperature, rinse temperature and wash pressure.

Wash Tank
Stainless steel with electric, gas or steam heating, thermostatically controlled, low water protected, sloped to drain with a 250 gallon capacity.

Pumped Rinse Tank
Stainless steel with electric, gas or steam heating to provide 180ºF/190ºF hot sanitizing rinse.

Racks
Constructed of stainless steel. Built to match specific washing requirements.

Due to an ongoing value analysis program at Champion, specifications contained in this catalog are subject to change without notice.
Champion Industries, Inc., P. O. Box 4149, Winston-Salem, NC 27115 • 336/661-1556 • Fax: 336/661-1979 • www.championindustries.com
2674 N. Service Road, Jordan Station, Ontario, Canada L0R 1S0 • 905/562-4195 • Fax: 905/562-4618

Champion®

The Dishwashing Machine Specialists

SPECIFICATIONS
MODEL 3072 CART, CABINET, RACK AND PAN WASHER

Cabinet
74-1/2" wide x 98" deep x 103-1/2" high. Clearance height 124". Standard door opening: 38" wide x 84" high. Wash chamber: 38" wide x 80" deep x 84" high. constructed of 12, 14 & 16 gauge, type 304 #3 finish, stainless steel. All seams tig-welded, cleaned and polished. Note: for pass-thru operation cabinet length is 108".

Door
Standard right hand or optional left hand swing constructed of 14 and 16 gauge, type 304 #3, stainless steel with integral stainless steel framework. Door double skinned for added strength. Equipped with door latch and inside release handle. Door is interlocked with limit switch to prevent machine operation while open.

Washer Floor
Floor constructed of 12 gauge stainless steel formed sheets designed to provide maximum strength. Floor supports constructed of 3" x 3" x 1/4" stainless steel angle.

Recirculating Wash Tank
Heated by 208/240 at 480 Volt electric immersion heaters, 42 kW total, thermostatically controlled wash temperature with low water protection system. 250 gallon capacity. 14 gauge stainless steel, sloped to drain. Gas and steam heating options available.

Wash Tank Filter
Perforated, stainless steel screen type designed for increased effectiveness and easy cleaning without emptying wash tank.

Wash Tank Fill Valve
Size 1" brass material, solenoid type, automatic.

Drain Valve
Size 2" brass material, gate type for manual or electrically operated ball valve for an automatic option.

Wash Pump
Two (2) 15 Hp, 208/240 or 480 volt, 3 phase, 60 cycle. Close coupled; Each pump delivers 250 gallons per minute at 35 to 45 psi, mounted on 12 gauge stainless steelformed channel base.

Rotating Wash Hub & Spray Arm Assembly
Water-driven stainless steel spray arm assembly with stainless steel jets, removable end caps and hand-operated, quick-release mechanism for easy cleaning and reassembly. Mounted on stainless steel base.

Sanitizing Pumped Rinse Tank
Stainless steel, 60 gallon capacity, with 208/240 or 480 Volt electric booster heaters, pumped rinse 42 kW total, to provide 180°/190° F hot sanitizing rinse. 1-1/2 Hp pump to provide 24 gallons per 30-second cycle. Gas and steam coil heating options available.

Final Rinse Piping
Type 304 stainless steel tubing with brass compression fittings and brass or optional stainless steel full cone rinse jets.

Control & Information Center
120 volt control circuit with push pad operation of “Power On,” “Stop” and Information “Short, Medium or Long Wash Cycles.” A digital display indicates “Time Remaining” for each cycle. LED’s indicate wash, rinse and unload functions. A buzzer is also included to provide an audible indication when the machine is ready to unload. A pre-programmed circuit board allows the push pad to be used as a “Diagnostic Center” by displaying “Error Codes” for ease of troubleshooting. Moisture resistant gauges measure Wash Temperature, Wash Pressure and Rinse Temperature.

External Rinse Hose
Externally mounted spray hose with spray gun for easy cleaning and maintenance of machine.

Steam Exhaust Vent
Steam exhaust vent 12-7/8" diameter, consisting of 14 gauge rolled collar for PVC pipe connection mounted to the top of the machine. Machine pre-wired with control timer for the addition of a fan.

Champion Industries, Inc.
P. O. Box 4149, Winston-Salem, NC 27115
Tel: 336/661/1556 Fax: 336/661-1979
www.championindustries.com

2674 N. Service Road,
Jordan Station, Ontario, Canada L0R 1S0
Tel: 905/562-4195 Fax: 905/562-4618

(1M) 10/06 Printed in U.S.A.

Champion®
The Dishwashing Machine Specialists

SPECIFICATIONS
MODEL 3072 CART, CABINET, RACK AND PAN WASHER

Optional Exhaust Fan

One (1) 12" diameter stainless steel fan, with 12-7/8" I.D. collar, mounted on washer to extract excess steam after final rinse cycle. 1/4 Hp TEFC or optional wash down duty motor, 120 volt, 1 phase, 1750 RPM, rated 500 CFM at .05" static pressure.

Optional Hood and Fan Assembly

Stainless steel hood with 15" diameter stainless steel fan mounted over door to evacuate steam that escapes when door is opened. 1-1/2 Hp TEFC or optional wash down duty motor, 208/240 or 480 volt, 3 phase, 60 cycle, 3450 RPM, rated 2700 CFM at .08" static pressure.

Racks

Customized to hold your specific items. Constructed of stainless steel rod and formed angle, Mig welded. Supplied with stainless steel casters and nylon wheels.

Connections

Water Inlet: 120°F, 1" NPT; Water Drain: 2" NPT; Overflow: 1-1/4" NPT; Electrical: Two point connection through knock out on electrical enclosure. Steam Heating Option: 3/4" NPT; Natural or Propane Gas Heating Option: 3/4" NPT

Services

120 Volt -1 phase, 5 running amps, 15 amp service, plus one of the following:

	Running Amps		
Elec. Spec.	**Electric Wash Electric Booster**	**Steam Wash[1] Steam Booster**	**Infrared Gas Wash[2] Infrared Gas Booster**
208 Volt 3 phase	314	81	81
240 Volt 3 phase	288	77	77
480 Volt 3 phase	144	39	39

[1] Steam Supply: Consumption: 185 lbs./hr.

[2] Gas Supply: Consumption: 180,000 BTU/hr.

Certifications

2674 N. Service Road,
Jordan Station, Ontario, Canada L0R 1S0
Tel: 905/562-4195 Fax: 905/562-4618

Champion Industries, Inc.
P. O. Box 4149, Winston-Salem, NC 27115
Tel: 336/661/1556 Fax: 336/661-1979
www.championindustries.com

(1M) 10/06 Printed in U.S.A.