Champion®

Service Replacement Parts

UH130B

UH330B

Undercounter Dishwashers
M4 Series

UH130B M4
High Temperature
with built-in booster
Wash Refresh Final Rinse

UH130 M4
High Temperature
without built-in booster
Wash Refresh Final Rinse

UH230B M4
High Temperature
with built-in booster
Fresh Water Final Rinse

UH230 M4
High Temperature
without built-in booster
Fresh Water Final Rinse

UH330B M4.2
Condensate Removal
High Temperature
with built-in booster
Fresh Water Final Rinse

UL130 M4
Low Temperature
Chemical Sanitization
Wash Refresh Final Rinse

THE MODELS CONTAINED IN THIS MANUAL COMPLY WITH ANSI/ASSE 1001 & ANSI/ASSE 1004.

Issue Date: 8.17.17

Manual P/N 115440 rev. M

For machines beginning with S/N W140946406 and above

www.championindustries.com

3765 Champion Blvd.,
Winston-Salem, NC 27105
(336) 661-1556 Fax: (336) 661-1660
Toll-free: 1(800) 858-4477

2674 N. Service Road, Jordan Station
Ontario, Canada L0R 1S0
(905) 562-4195 Fax: (905) 562-4618
Toll-free: 1(800) 263-5798

Printed in the USA

The Spirit of Excellence

For future reference, record your dishwasher information in the box below.

Model Number_____ Serial Number_____

Voltage_____Hertz_____ Phase_____

Service Agent _____ Tel:_____

Parts Distributor _____ Tel:_____

National Service Department

In Canada:
Toll-free: (800) 263-5798
Tel: (905) 562-4195
Fax: (905) 562-4618
email: service@moyerdiebellimited.com

In the USA:
Toll-free: (800) 858-4477
Tel: (336) 661-1556
Fax: (336) 661-1660
email: service@championindustries.com

ATTENTION:

The model no., serial no., voltage, Hz and phase are needed to identify your machine and to answer questions.

The machine data plate is located on the lower front panel.

Please have this information ready if you call for service assistance.

ENERGY STAR

U.S. GREEN BUILDING COUNCIL MEMBER

The USGBC Member Logo is a trademark owned by the U.S. Green Building Council and is used by permission. The logo signifies only that Moyer Diebel is a USGBC member; USGBC does not review, certify or endorse the products or services offered by its members.

COPYRIGHT © 2017 All rights reserved Printed in the USA

Service Replacement Parts

Illustrations — Page

Wash Pump/Motor Assembly - All Models 2
Base Assembly - All Models 4
Fill Piping Assembly - UH130, UH130B, UL130, UH330B 8
Fill Solenoid Valve - UH130, UH130B, UL130, UH330B 10
Fill Piping Assembly - UH230, UH230B 12
Fill Rinse Piping Assembly - UH230, UH230B 14
Final Rinse Piping - UH330B Prior to S/N W170568116 16
Final Rinse Piping - UH330B Beginning with S/N W170568116 and above 18
Heat Recovery Assembly - UH330B Prior to S/N W170568116 20
Heat Recovery Assembly - UH330B Beginning with S/N W170568116 and above 22
Booster Heater and Pressure Switches - UH330B Prior to S/N W170568116 24
Booster Heater - UH330B Beginning with S/N W170568116 and above 26
Booster Hoses and Level Sensor - UH330B Beginning with S/N W170568116 and above 28
Fill Chute Assembly - UH130, UH130B, UL130 30
Chemical Dispensing Pumps - UH130, UH130B, UH230, UH230B 32
Chemical Dispensing Pumps - UH330B 34
Chemical Dispensing Pumps - UL130 36
Booster Assembly - UH130B, UH230B 38
Power Input Block and Cord Assemblies - All Models 40
Timer Control Board Assembly - All Models 42
Wash and Rinse Spray Arms and Drain Valve - UH230, UH230B, UH330B 44
Wash/Rinse Spray Arm and Drain Valve - UH130, UH130B, UL130 46
Control Panel - UH130, UH130B 48
Control Panel - UH230, UH230B 50
Control Panel - UH330B 52
Control Panel - UL130 54
Panels - UH130, UH130B, UH230, UH230B, UL130 56
Panels - UH330B 58
Door Assembly - All Models 60
Dish Racks, Line Strainer, PRV 62

Wash Pump/Motor Assembly - All Models

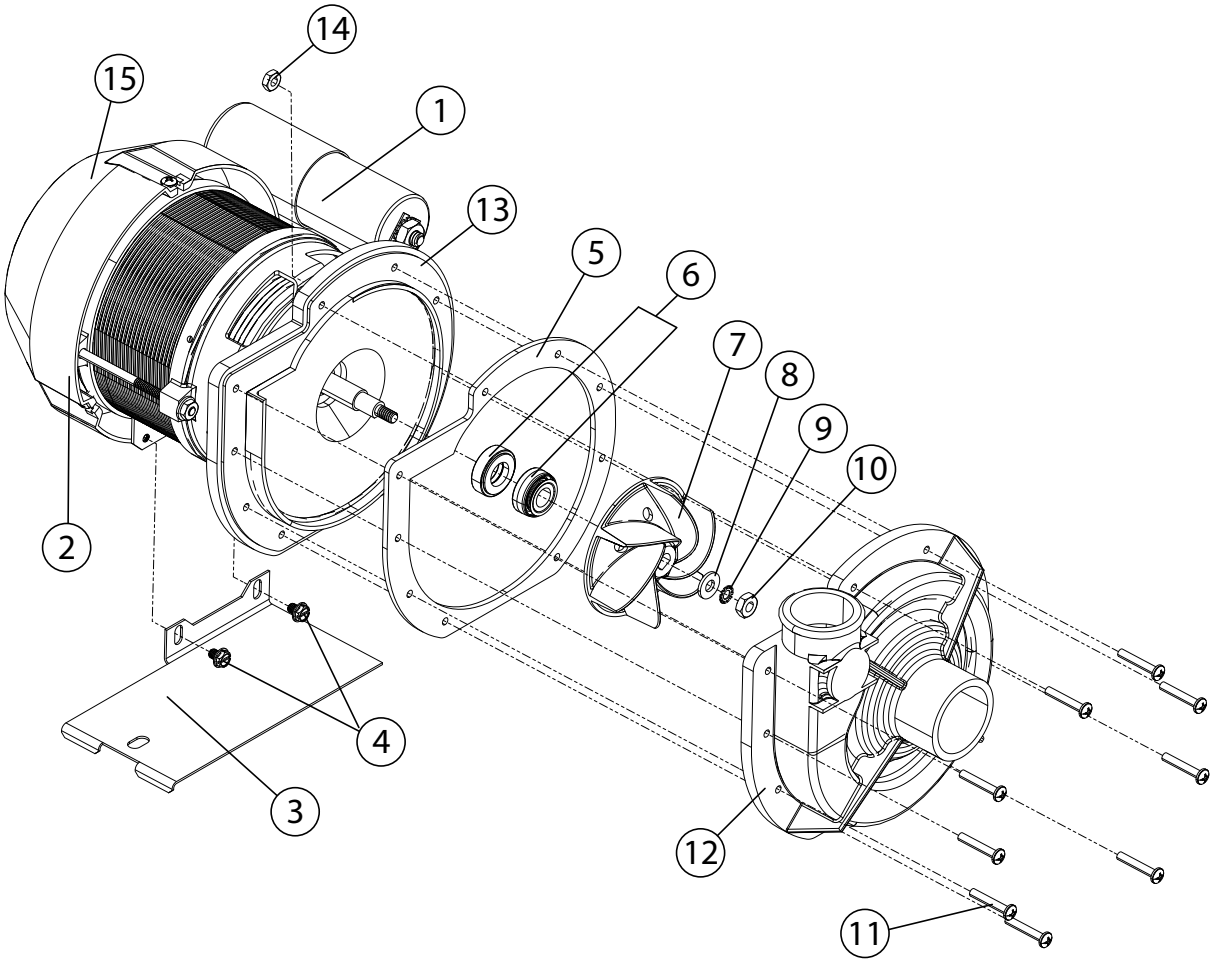

Item No.	Part No.	Description	Qty.
1	0512347	CAPACITOR 40μF	1
2	0512101	PUMP/MOTOR ASSEMBLY COMPLETE 115VAC/60/1	1
3	0313394	BRACKET, WASH PUMP	1
4	0512185	BOLT, HEX FLANGE 1/4-20 X 3/8" SST	2
5	110285	GASKET	1
6	114139	SEAL	1
7	0512345	IMPELLER	1
8	0501478	WASHER, PLAIN, 17/64"	1
9	106482	WASHER, LOCK, 1/4"	1
10	114144	NUT, M6	1
11	0512340	SCREW, M4, PHIL, PAN HD.	9
12	0512341	VOLUTE, PUMP	1
13	114137	BACKPLATE, PUMP	1
14	107337	NUT, M4	9
15	0513131	COVER, REAR MOTOR FAN	1

NOTE: The pump motor is not sold separately.

Base Assembly - All Models

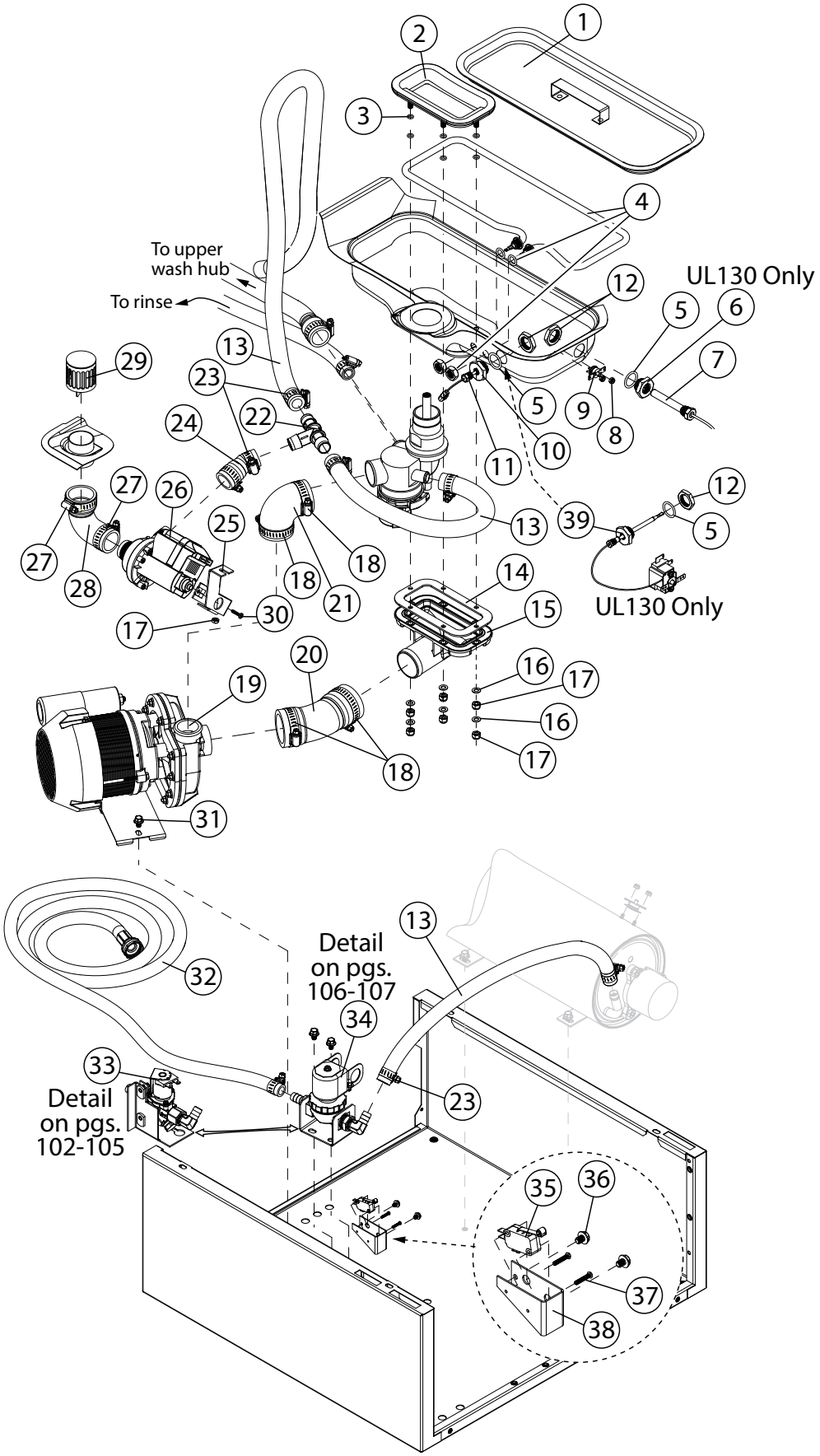

Item No.	Part No.	Description	Qty.
1	0512136	SCREEN, SCRAP ASSY.	1
2	0513324	FLANGE, PUMP SUCTION	1
3	0513677	O-RING	A/R
4	0512169	HEATER, 120VAC 750W) *(UL130)*	1
–	0512426	HEATER, 240VAC 2000W *(All except UL130)*	1
5	0512099	O-RING	1
6	0508872	ADAPTOR, THERMOMETER *(UL130 Only)*	1
7	0512107	THERMOMETER, WASH TANK *(UL130 Only)*	1
8	108954	NUT, GRIP 6-32 WITH NYLON INSERT SST	2
9	113604	THERMOSTAT, HI-LIMIT BI-METAL SNAP, 212°F	1
10	0512299	ADAPTOR, THERMISTOR	1
11	112612	THERMISTOR, 10 KΩ, 2 WIRE ASSY, WASH TANK *(All except UL130)*	1
12	201029-1	NUT, LOCK 1/2 INCH NI PLATED	A/R
13	0509302	HOSE, 5/8" ID X 1" OD	A/R
14	0513329	GASKET, PUMP SUCTION	1
15	0513325	ELBOW, PUMP SUCTION	1
16	0501476	WASHER	6
17	107967	NUT, 1/4-20 W/NYLON INSERT SST	6
18	0502571	CLAMP, HOSE 1-1/16" - 2"	2
19	0512101	PUMP/MOTOR COMPLETE 115/60/1	1
20	0513328	HOSE, PUMP SUCTION	1
21	0512119	HOSE, PUMP DISCHARGE	1
22	0512134	TEE, 3/4", POLY.	1
23	0508808	CLAMP, SS GEAR	2
24	0313171	HOSE, MOULDED 2-1/2"	1
25	0312145	BRACKET, DRAIN PUMP *(UH230, UH230B, UH330B)*	1

Item No.	Part No.	Description	Qty.
26	0512227	PUMP, DRAIN 115VAC *(UH230, UH230B, UH330B)*	1
27	0512322	CLAMP, HOSE	2
28	0513339	HOSE, OVERFLOW *(UH230, UH230B, UH330B)*	1
29	0712236	TUBE, OVERFLOW GUARD *(UH230, UH230B)*	1
—	0712236-1	TUBE, OVERFLOW GUARD *(UH330B ONLY)*	1
30	109835	SCREW #8 X 1/2" SELF-TAPPING SST	1
31	0512185	BOLT, HEX FLANGE 1/4-20 X 3/8" SST	1
32	0509526	HOSE, 1/2" X 7 FT. FEM. GARD. ADAPT.	1
33	0504952	VALVE, FILL 5.0 GPM *(UH130, UH130B, UL130)*	1
—	0513557	VALVE, FILL 1.0 GPM *(UH330B Only)*	1
34	109886	VALVE, SOLENOID, 1/2" NPT *(UH230, UH230B)*	1
35	0501379	SWITCH, 15A	1
36	0512792	SCREW, 10-32 X 1/4" RD. HD. PHILL. SST	2
37	0508752	SCREW, 4-40 X 5/8" RH. HD. PHILL. SST	2
38	0313432	BRACKET, DOOR SWITCH	1
39	0507323	THERMOSTAT, WASH *(UL130 Only)*	1

This Page Intentionally Left Blank

Fill Piping Assembly - UH130, UH130B, UL130, UH330B

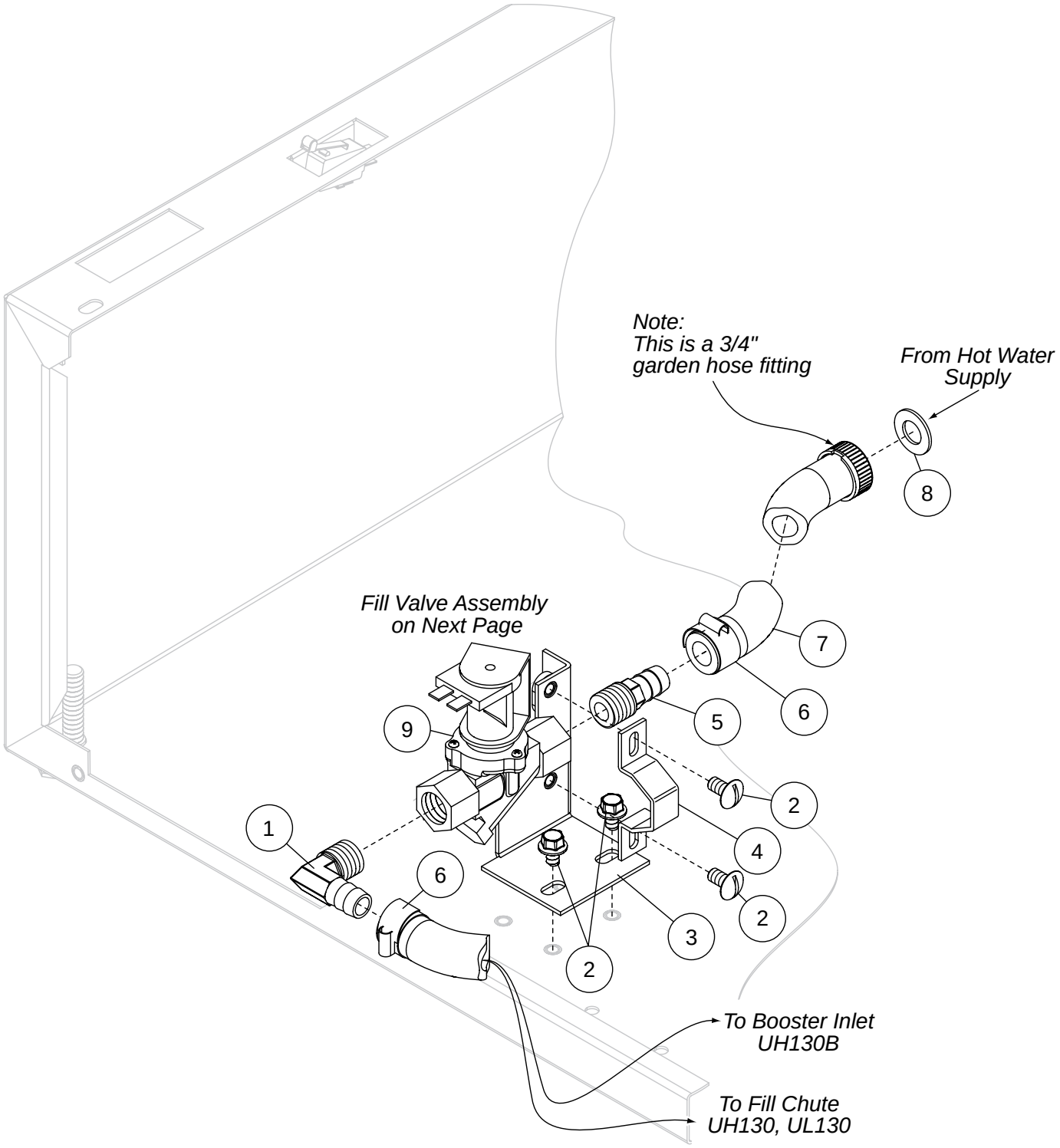

Item No.	Part No.	Description	Qty.
1	0502653	ELBOW, 90° 3/8" MPT X 1/2" HOSE	1
2	0512185	BOLT, HEX FLANGE 1/4-20 X 3/8" SST	4
3	0300065	SUPPORT, VALVE	1
4	0300203	CLAMP, VALVE	1
5	0502618	HOSE BARB, 1/2" X 3/8" MPT	1
6	0512985	CLAMP, HOSE	1
7	0509526	HOSE, 1/2" X 7 FT. FEM. GARD. ADAPT.	1
8	0505320	WASHER, 1″ OD GARDEN HOSE	1
9	0504952	VALVE, FILL, 5.0 GPM (EXCEPT UH330B)	1
–	0513557	VALVE, FILL 1.0 GPM (UH330B ONLY)	1

Fill Solenoid Valve - UH130, UH130B, UH330B, UL130

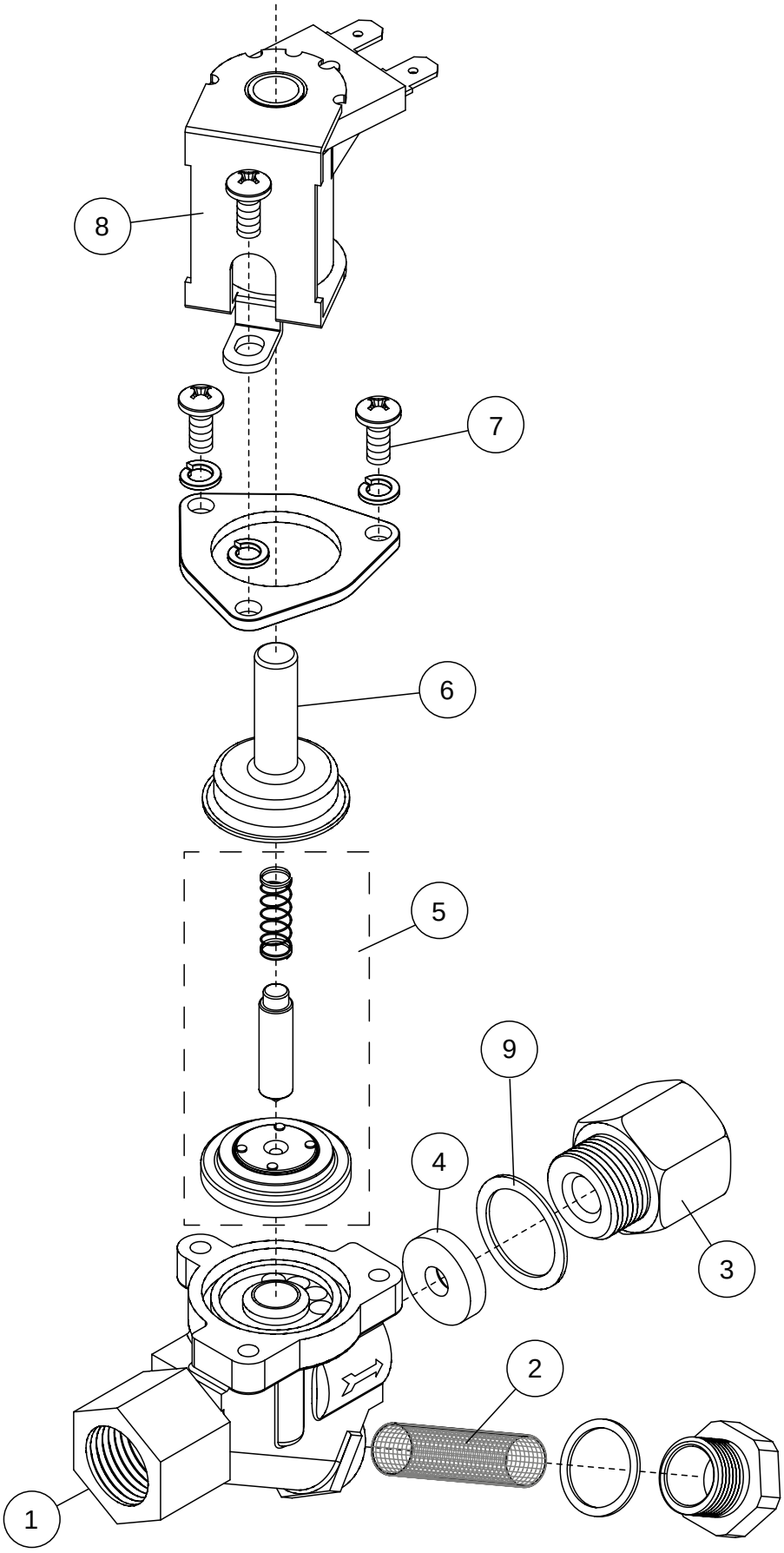

Item No.	Part No.	Description	Qty.
1	0504952	VALVE, FILL 5.0 GPM (EXCEPT UH330B)	1
–	0513557	VALVE, FILL 1.0 GPM (UH330B ONLY)	1
2	0502803	SCREEN, VALVE STRAINER	1
3	0502804	GASKET, CAP	1
4	0504958	WASHER, FLOW 5.0 GPM (EXCEPT UH330B)	1
–	0513674	WASHER, FLOW 1.0 GPM (UH330B ONLY)	1
5	0502811	KIT, REBUILD	1
6	0505229	GUIDE	1
7	0501406	SCREW, SLOT SS RH 8-32 X 1/2"	3
8	0505235	COIL, 115V 60HZ 10W	1
9	0502807	GASKET, OUTLET (COPPER)	1

Fill Piping Assembly - UH230, UH230B

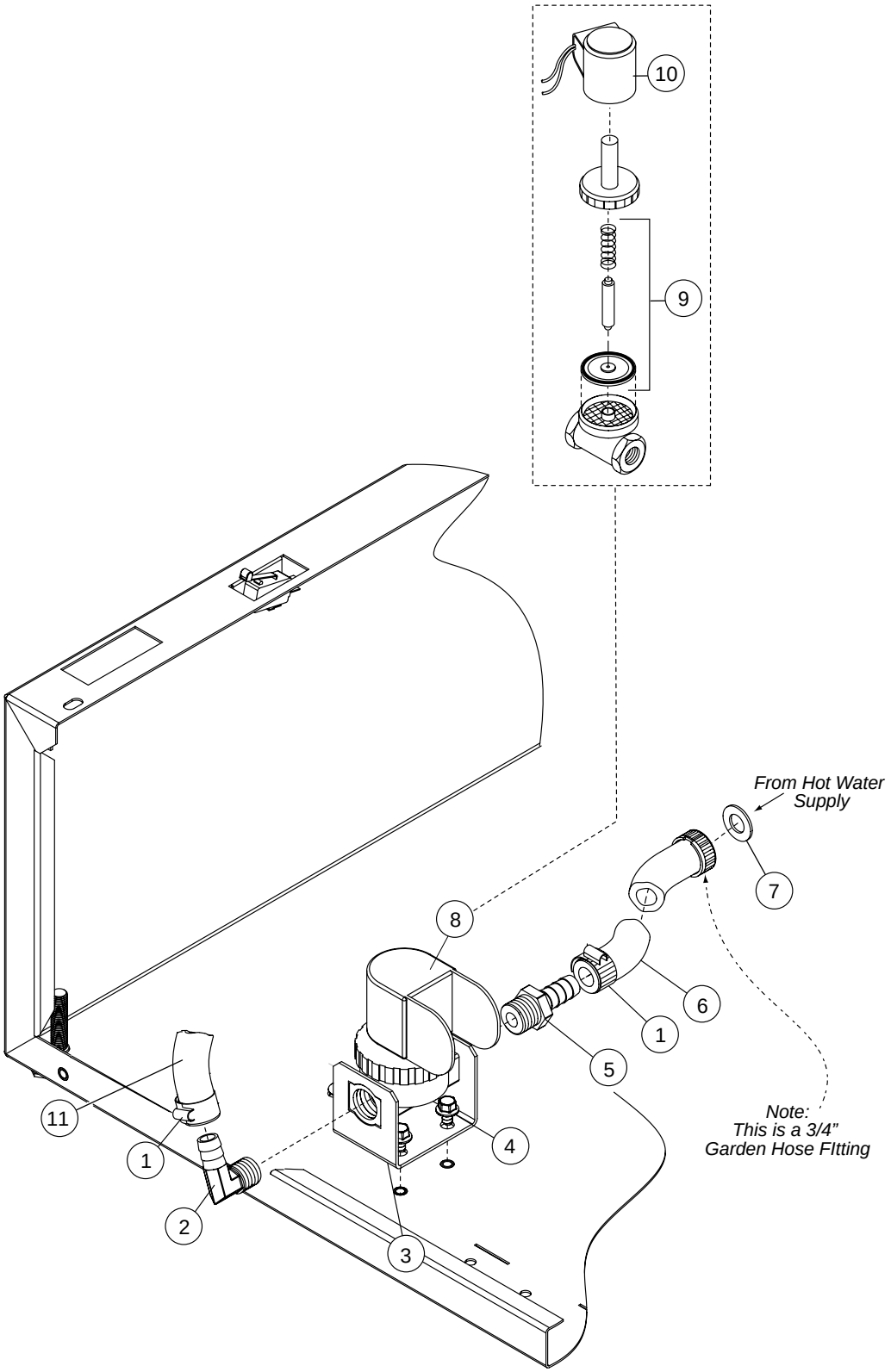

Item No.	Part No.	Description	Qty.
1	0512985	CLAMP, HOSE	2
2	0508782	ELBOW, 90° 1/2" MPT X 1/2" HOSE	1
3	0312146	BRACKET, 1/2" SOLENOID VALVE *(UH230, UH230B)*	1
4	0512185	BOLT, HEX FLANGE 1/4-20 X 3/8" SS	2
5	0502618	BARB, HOSE 1/2" X 3/8" MPT	1
6	0509526	HOSE, 1/2" X 7 FT. FEM. GARD. ADAPT.	1
7	0505320	WASHER, 1" OD GARDEN HOSE	1
8	109886	VALVE, SOLENOID, 1/2” NPT 120VAC	1
9	109902	KIT, REPAIR, 1/2" SOLENOID VALVE	1
10	108516	KIT, REPAIR, COIL, 120VAC	1
11	107417	HOSE, RUBBER 1/2" ID X .84" OD	A/R

Upper Final Rinse Piping - UH230, UH230B

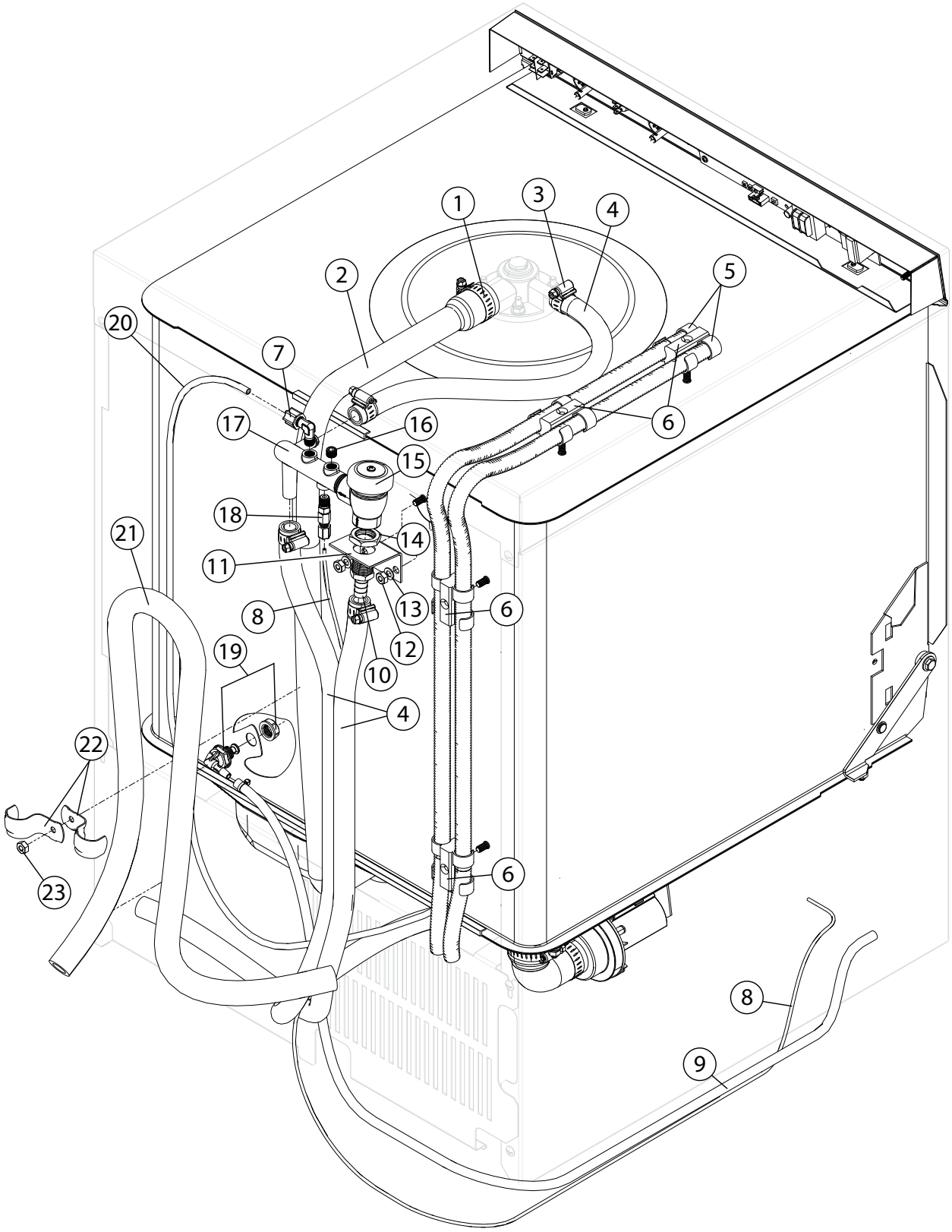

Item No.	Part No.	Description	Qty.
1	0502571	CLAMP, HOSE	1
2	0512120	HOSE, UPPER WASH	1
3	0512985	CLAMP, HOSE	A/R
4	107417	HOSE, RUBBER 1/2" ID X .84" OD	A/R
5	0512757	CONDUIT, 1/2"	A/R
–	0512758	CONDUIT, 3/8"	A/R
6	0512369	CLAMP, CONDUIT	4
7	112728	ELBOW, 1/8" MPT X 1/4" COMP PP	1
8	112883-1	TUBING, 1/8" OD X 1/16" ID (RINSE-AID)	A/R
9	0502667	TUBING, 1/4" ID X 3/8" OD (DETERGENT)	A/R
10	0502651	COUPLER 1/2" MPT X 1/2" HOSE	1
11	0312190	BRACKET, VACUUM BREAKER	1
12	100003	NUT, HEX SST 1/4-20	2
13	106482	WASHER, SPLIT LOCK 1/4" SST	2
14	201029-1	NUT, LOCK 1/2" NICKEL PLATED	1
15	100500	VACUUM BREAKER, 1/2" NPT, BRONZE	1
—	900836	REPAIR KIT, VACUUM BREAKER 1/2"	1
16	0508817	PLUG, 1/8" HEX COUNTERSUNK	A/R
17	0513110	MANIFOLD, RINSE	1
18	112763	FITTING, INJECTOR RINSE-AID (UH230, UH230B ONLY)	1
19	0713656	KIT, DETERGENT FITTING	1
—	110750	GASKET	1
—	0513672	NUT, NP 1/4' NPS PP BLACK	1
20	107928	TUBING, 1/4" NATURAL	AR
21	0509302	HOSE, 5/8" ID X 1" OD	A/R
22	107239	CLAMP, EMT	2
23	107967	NUT, 1/4-20 W/NYLON INSERT SST	1

Final Rinse Piping - UH330B Prior to S/N W170568116

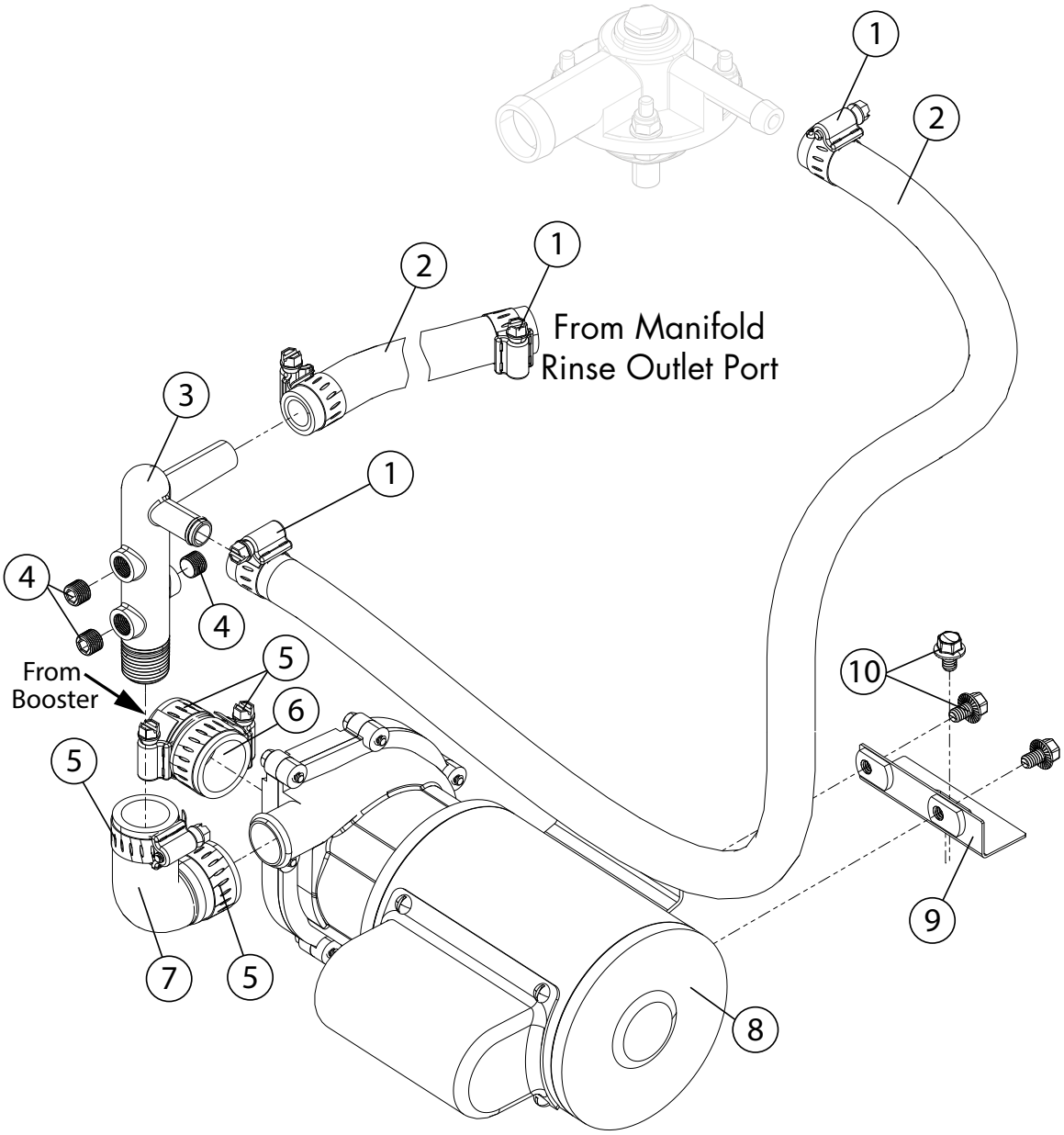

Item No.	Part No.	Description	Qty.
1	0512985	CLAMP, HOSE	A/R
2	107417	HOSE, RUBBER 1/2" ID X .84" OD	A/R
3	0513110	MANIFOLD, RINSE	1
4	0508817	PLUG, 1/8" HEX COUNTERSUNK	3
5	0502563	CLAMP	2
6	0513679	HOSE, 1" ID X 1-3/8" BRAIDED	1
7	0513613	HOSE, MOLDED, RINSE DISCHARGE	1
8	115231	PUMP/MOTOR, RINSE	1
9	0313610	BRACKET, RINSE PUMP	1
10	0512185	BOLT, HEX FLANGE 1/4-20 X 3/8" SST	2

Final Rinse Piping - UH330B beginning with S/N W170568116 and above

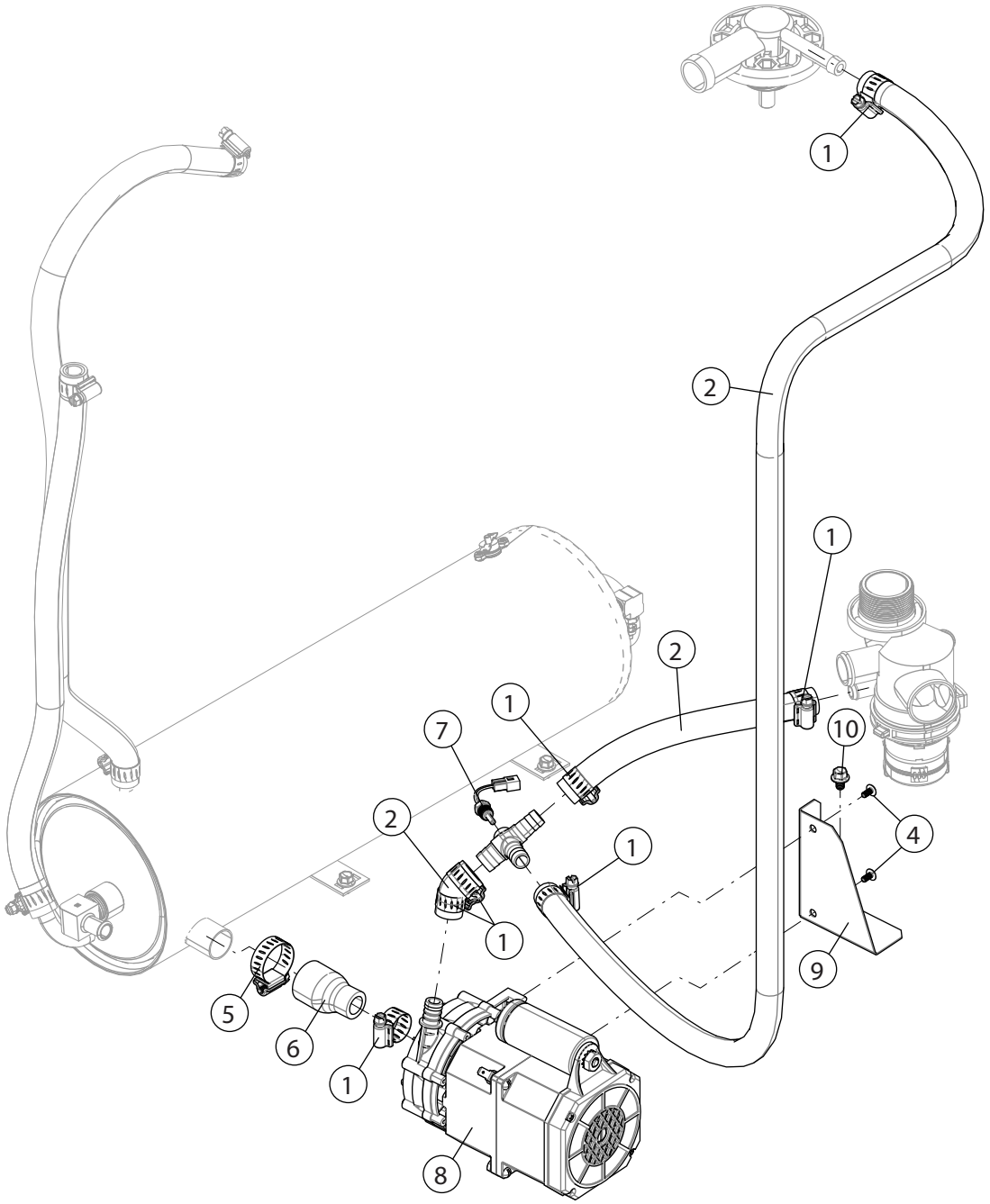

Item No.	Part No.	Description	Qty.
1	0512985	CLAMP, HOSE	6
2	107417	HOSE, RUBBER 1/2" ID X .84" OD	A/R
3	0514324	MANIFOLD, RINSE PUMP	1
4	104624	SCREW, 8-32 X 3/8" TRUSS HEAD	2
5	0502563	CLAMP	1
6	0514323	HOSE, MOLDED RINSE SUCTION	1
7	112612	THERMISTOR, 10KΩ, 2-WIRE ASSY.	1
8	0514317	PUMP, RINSE 115VAC, HR M4.2	1
9	0314319	BRACKET, PUMP MOUNT	1
10	0512185	BOLT, HEX FLANGE 1/4-20 X 3/8" SS	1

Heat Recovery Assembly - UH330B Prior to S/N W170568116

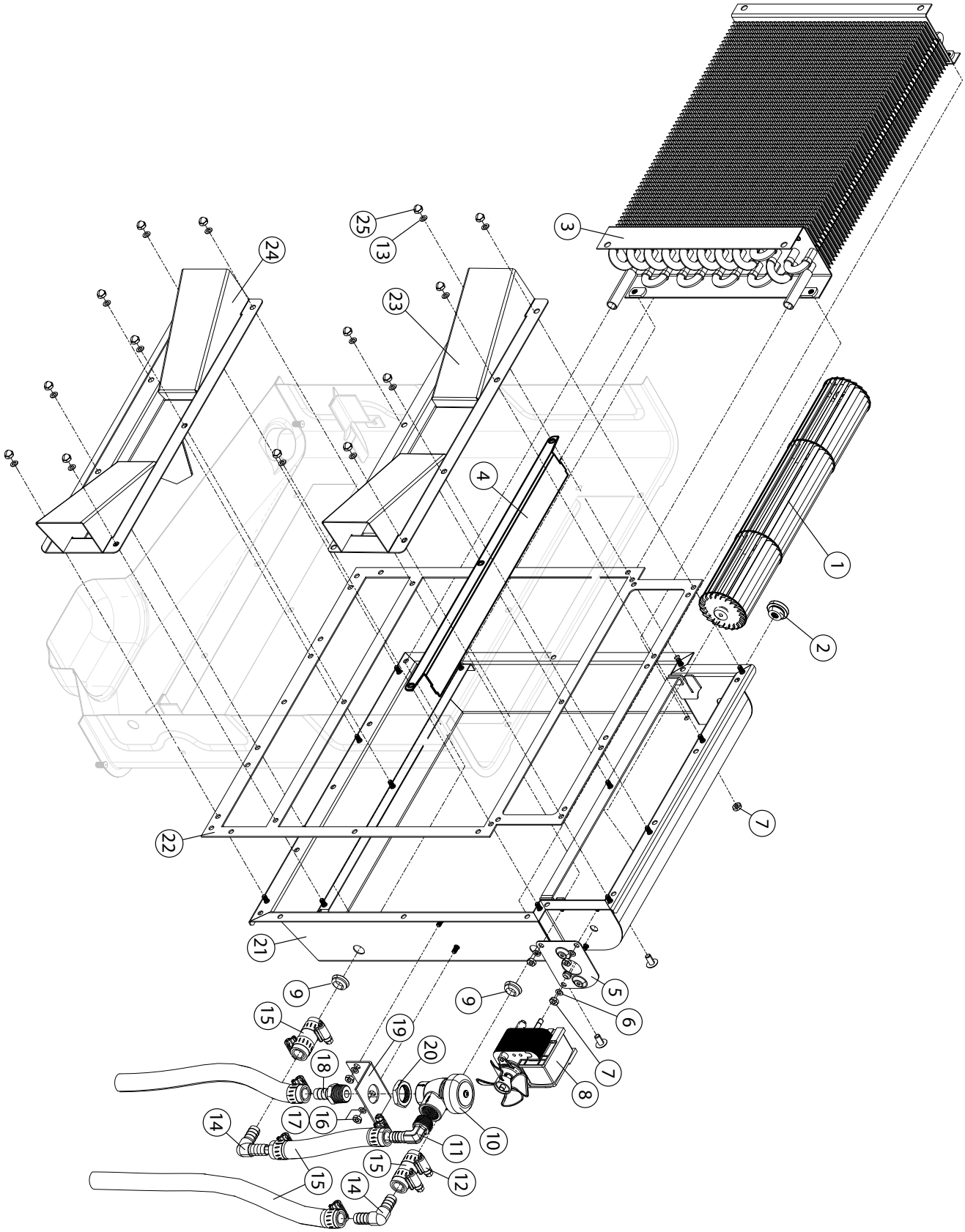

Item No.	Part No.	Description	Qty.
1	0513572	BLOWER	1
2	0513574	BEARING (COMES WITH RUBBER HSG.)	2
3	0513571	COIL, HEAT RECOVERY	1
4	0313599	DEFLECTOR, FAN AIR	1
5	0313594	MOUNT, FAN MOTOR	1
6	0502808	WASHER	2
7	0503580	NUT, 10-32 SST	A/R
8	0513573	MOTOR, BLOWER 115VAC	1
9	0513732	SEAL, V-RING 1/2"	2
10	100500	BREAKER, VACUUM	1
–	900836	REPAIR KIT, VACUUM BREAKER 1/2"	A/R
11	0508782	ELBOW, 1/2" X 1/2" HOSE BARB	1
12	0512985	CLAMP, HOSE	4
13	0507709	WASHER	A/R
14	0513648	ELBOW, 1/2" HOSE	2
15	107417	HOSE, RUBBER 1/2" ID X .84" OD	A/R
16	100003	NUT, HEX 1/4-20 SST	2
17	106482	WASHER, SPLIT LOCK 1/4" SST	2
18	0502651	COUPLER, 1/2" MPT X 1/2" HOSE	1
19	0312190	BRACKET, VACUUM BREAKER	1
20	201029-1	NUT, LOCK 1/2" NICKEL PLATED	1
21	0713563	HOUSING, COIL	1
22	0513582	GASKET, HOUSING	1
23	0713564	DEFLECTOR, UPPER AIR	1
24	0713566	DEFLECTOR, LOWER AIR	1
25	106481	NUT, CAP 10-32 SST	A/R

Heat Recovery Assembly - UH330B beginning with S/N W170568116 above

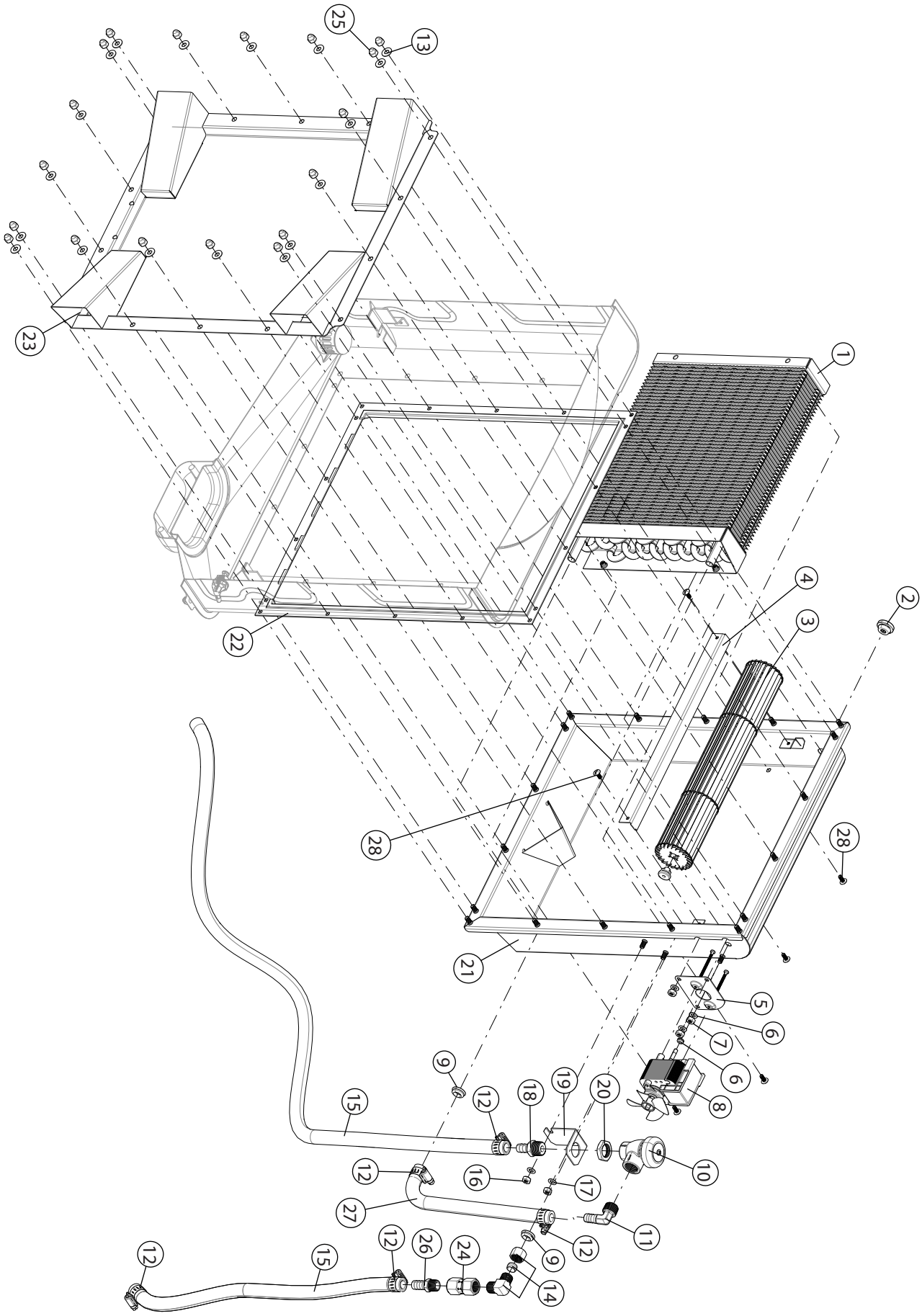

Item No.	Part No.	Description	Qty.
1	0513572	BLOWER	1
2	0513574	BEARING (COMES WITH RUBBER HSG.)	2
3	0514293	COIL, HEAT RECOVERY M4.2	1
4	0314311	DEFLECTOR, FAN AIR M4.2	1
5	0313594	MOUNT, FAN MOTOR	1
6	0502808	WASHER	2
7	0503580	NUT, 10-32 SST	A/R
8	0513573	MOTOR, BLOWER 115VAC	1
9	0513732	SEAL, V-RING 1/2"	2
10	100500	BREAKER, VACUUM	1
--	900836	REPAIR KIT, VACUUM BREAKER 1/2"	A/R
11	0508782	ELBOW, 1/2" X 1/2" HOSE BARB	1
12	0512985	CLAMP, HOSE	4
13	0501476	WASHER	A/R
14	0514316	ELBOW, 1/2" COMP. X 3/8" MNPT BRASS	1
15	107417	HOSE, RUBBER 1/2" ID X .84" OD	A/R
16	100003	NUT, HEX 1/4-20 SST	2
17	106482	WASHER, SPLIT LOCK 1/4" SST	2
18	0502651	COUPLER, 1/2" MPT X 1/2" HOSE	1
19	0314312	BRACKET, VACUUM BREAKER M4.2	1
20	201029-1	NUT, LOCK 1/2" NICKEL PLATED	1
21	0714299	HOUSING, COIL M4.2	1
22	0514313	GASKET, HOUSING M4.2	1
23	0714300	DEFLECTOR, AIR M4.2	1
24	0507324	VALVE, CHECK 3/8"	1
25	106014	NUT, ACORN 1/4-20 SST	A/R
26	0502618	BARB, HOSE 1/2" X 3/8" MPT	1
27	0514322	HOSE, HEAT EXCHANGE COIL SUPPLY M4.2	1
28	100007	SCREW, 10-32 X 3/8" TRUSS HEAD SST	A/R

Booster Heater and Pressure Switches - UH330B Prior to S/N W170568116

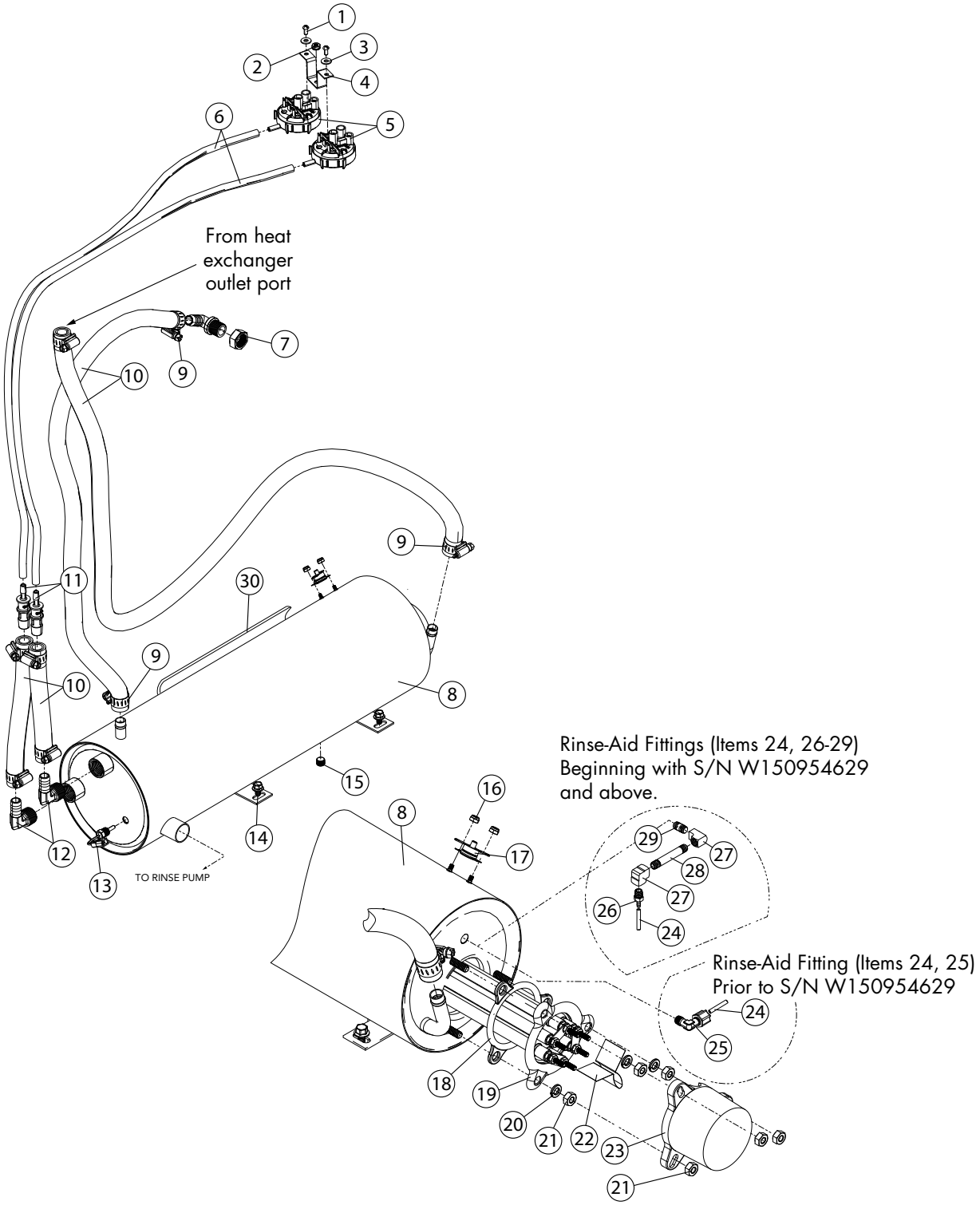

Item No.	Part No.	Description	Qty.
1	109835	SCREW, #8 X 1/2" PAN HD. PHIL. SST	4
2	0503580	NUT 10-32 SST	4
3	0507709	WASHER, FLAT #10 SST	4
4	0313587	BRACKET, PRESSURE SWITCH	2
5	H31171	SWITCH, PRESSURE	2
6	H160121	HOSE, EPDM	A/R
7	0513731	ELBOW, 1/4 NPT X 1/2" HOSE (C/W NUT)	1
8	0713565	TANK, BOOSTER	1
9	0512985	HOSE, CLAMP	A/R
10	107417	HOSE, RUBBER 1/2" ID X .84" OD	A/R
11	0513650	ADAPTER, 1/2" X 1/4" HOSE	2
12	0508782	ELBOW, 1/2" NPT X 1/2" HOSE	2
13	112612	THERMISTOR, 10 KΩ, 2-WIRE	1
14	0512185	BOLT, HEX FLANGE 1/4-20 X 3/8" SST	2
15	0508817	PLUG, 1/8"	1
16	108954	NUT, GRIP 6-32 W/NYLON INSERT	2
17	110562	THERMOSTAT, HIGH LIMIT 240°F	1
18	109985	SEAL, ELEMENT BOOSTER	1
19	0513654*	BOOSTER, ELEMENT 3.5 KW	1
–	111235-1**	BOOSTER, ELEMENT 5 KW	1
20	106482	WASHER, LOCK 1/4" SPLIT SST	3
21	100003	NUT, PLAIN 1/4-20 SST	6
22	111885	INSULATOR	1
23	107908	COVER, ELEMENT	1
24	112883-1	TUBING, 1/8" OD X 1/16" ID (RINSE-AID)	A/R
25	112728*	FITTING	1
26	0514158**	ADAPTER, 1/8" HOSE X 1/8" MNPT BRASS	1
27	0514156**	ELBOW, 1/8" X 1/8" NPT BRASS	2
28	0514155**	NIPPLE, 1/8" X 2" BRASS	1
29	100939**	NIPPLE, CLOSE 1/8" NPT BRASS	1
30	0512790	INSULATION, BOOSTER TANK	1
—	0513538	HARNESS, BOOSTER CONTROL WIRING *(Not Shown)*	1
—	0714170	KIT, BOOSTER SERVICE (Includes items 12,13,15,17,18,26-30. Does not include item 19)	A/R

* - Prior to S/N W150954629
** - Beginning with S/N W150954629 and above

Booster Heater - UH330B beginning with S/N W170568116 and above

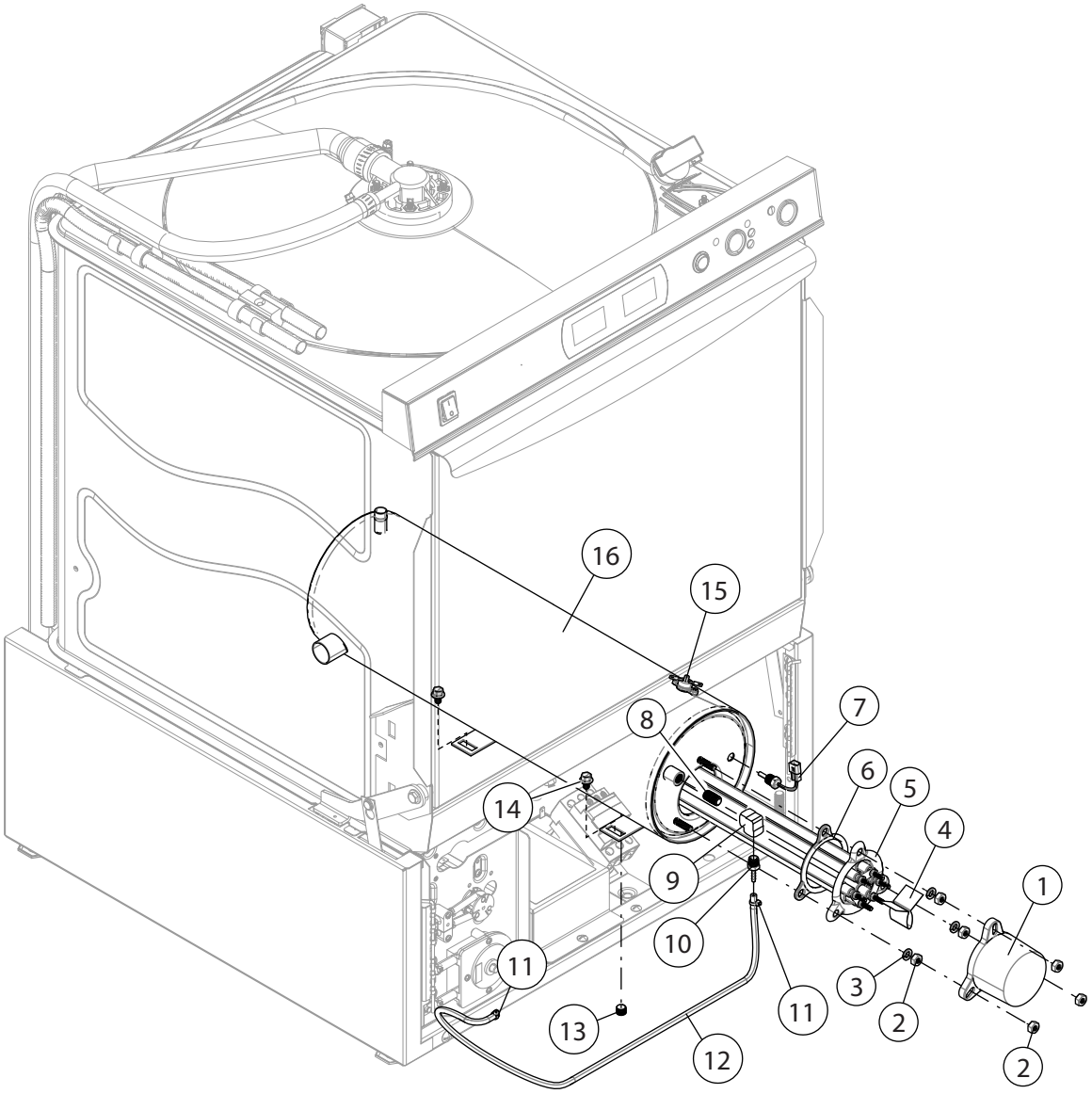

Item No.	Part No.	Description	Qty.
1	107908	COVER, ELEMENT	1
2	100003	NUT, PLAIN 1/4-20 SST	6
3	106482	WASHER, LOCK 1/4" SPLIT SST	3
4	111885	PAPER, FISH	1
5	0514296	BOOSTER, ELEMENT 4.3 KW	1
6	109985	SEAL, ELEMENT BOOSTER	1
7	0513310	THERMISTOR, PROBE	1
8	100939	NIPPLE, CLOSE 1/8" NPT BRASS	1
9	0514156	ELBOW, 1/4" X 1/8" NPT BRASS	1
10	0514158	ADAPTER, 1/8" HOSE X 1/8" MNPT BRASS	1
11	0501519	TIE, CABLE 4"	2
12	0502666	HOSE, 1/8" ID X 1/4" OD PVC	A/R
13	0508817	PLUG, 1/8" HEX COUNTERSUNK SST	1
14	0512185	BOLT, HEX FLANGE 1/4-20 X 3/8" SST	2
15	110562	THERMOSTAT, HIGH LIMIT 240°F	1
16	0714284	TANK, BOOSTER	1
—	0512790	INSULATION, BOOSTER TANK (Not Shown)	1

Booster Hoses and Level Sensor - UH330B beginning with S/N W170568116 and above

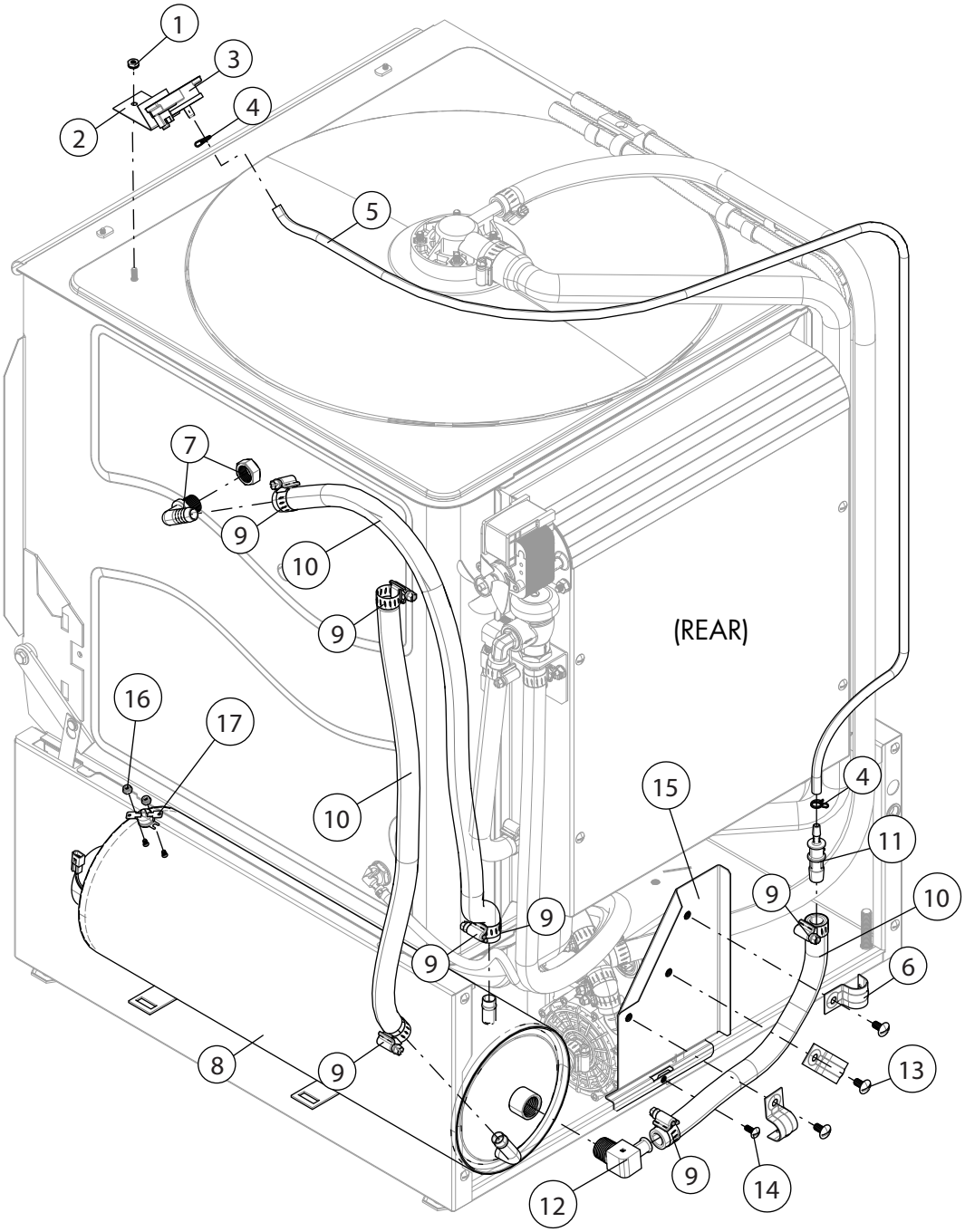

Item No.	Part No.	Description	Qty.
1	0503580	NUT, KEPS 10-32 SST	1
2	0313865	BRACKET, SENSOR	1
3	0513831	SENSOR, LEVEL	1
4	0513696	CLAMP, DOUBLE SPRING 10.7 MM PLATED	2
5	H160121	HOSE, EPDM	A/R
6	0513736	CLAMP, EMT 1/2"	3
7	0513731	ELBOW, 1/4 NPT X 1/2" HOSE (C/W NUT)	1
8	0713565	TANK, BOOSTER	1
9	0512985	CLAMP, HOSE	6
10	107417	HOSE, RUBBER 1/2" ID X .84" OD	A/R
11	0513650	ADAPTER, 1/2" X 1/4" HOSE	2
12	0514318	ELBOW, 1/2" HOSE X 1/2" MNPT BRASS	1
13	100073	SCREW, 1/4-20 X 1/2" TRUSS HEAD SST	3
14	100007	SCREW, 10-32 X 1/2" TRUSS HEAD SST	1
15	0314320	BRACKET, PRESSURE TUBE M4.2	1
16	108954	NUT, GRIP 6-32 W/NYLON INSERT	2
17	110562	THERMOSTAT, HIGH LIMIT 240°F	1

Fill Chute Assembly - UH130, UH130B, UL130

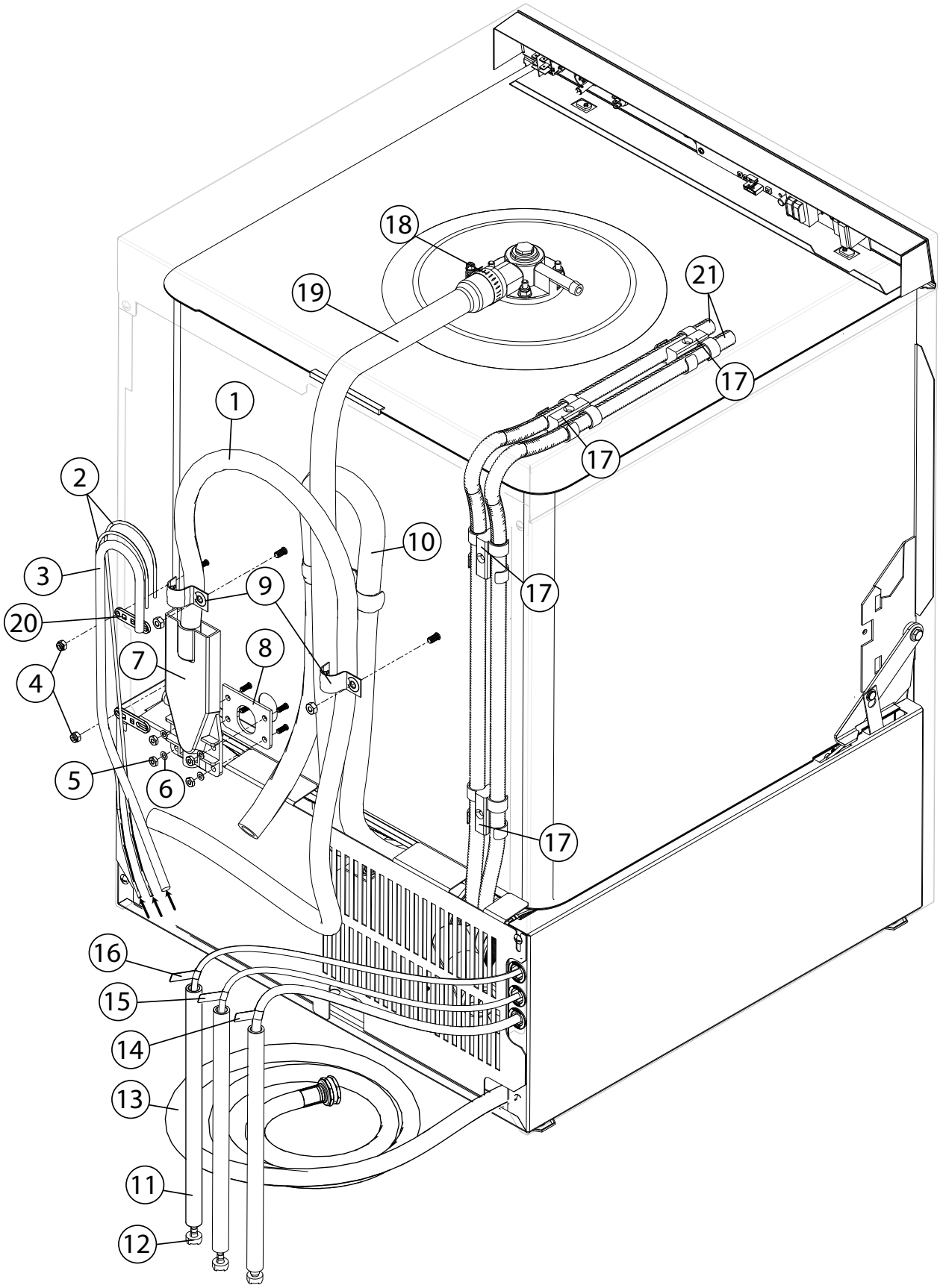

Item No.	Part No.	Description	Qty.
1	107417	HOSE, RUBBER 1/2" ID X .84" OD	A/R
2	0502666	HOSE, 1/8" ID X 1/4" OD PVC	A/R
3	0502667	HOSE, 1/4" ID X 3/8" OD PVC	A/R
4	100194	NUT, GRIP 10-32 W/NYLON INSERT	2
5	0503722	NUT, HEX 10-32 SST	4
6	0507709	WASHER, FLAT #10 SST	4
7	0508867	CHUTE, INLET	1
8	0509048	GASKET, INLET CHUTE	1
9	0308822	CLAMP, EMT 1/2"	1
10	0509302	HOSE, 5/8" ID X 1" OD PVC BRAIDED	A/R
11	0306363	TUBE, STIFFENER	A/R
12	0501869	STRAINER	A/R
13	0509526	HOSE, FILL 1/2" X 7 FT. FEM. GARD. ADAPT.	1
14	0503695	LABEL, DETERGENT HOSE	1
15	0505483	LABEL, RINSE-AID HOSE	1
16	0503694	LABEL, SANITIZER HOSE (UL130 ONLY)	1
17	0512369	CLAMP, CONDUIT	4
18	0502571	CLAMP, HOSE GEAR	A/R
19	0512120	HOSE, WASH	1
20	106090	TIE PLATE	2
—	0501518	TIE, NYLON 5-1/2"	2
21	0512757	CONDUIT, 1/2"	A/R
—	0512758	CONDUIT, 3/8"	A/R

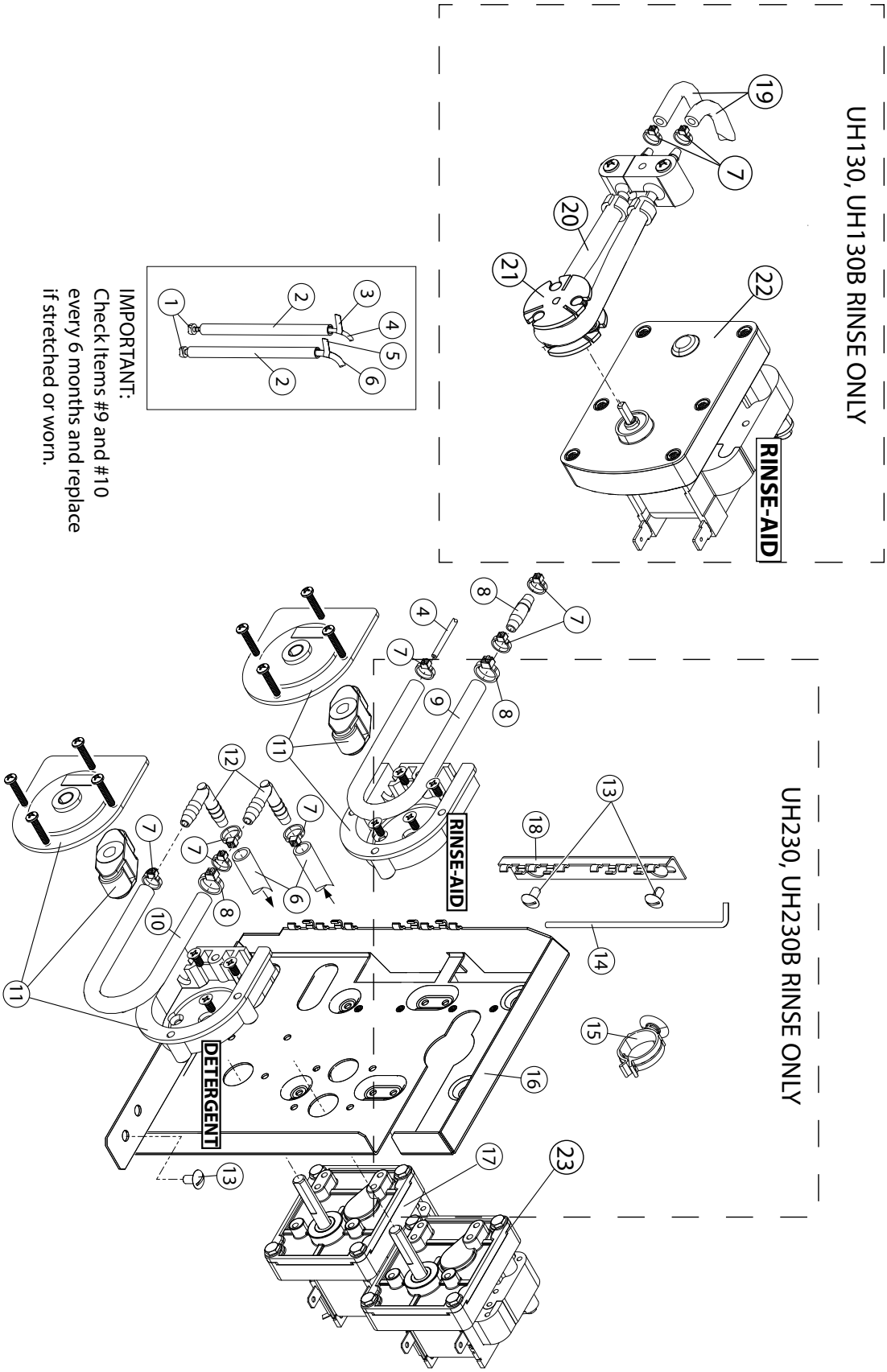
UH130, UH130B RINSE ONLY
RINSE-AID
IMPORTANT:
Check Items #9 and #10
every 6 months and replace
if stretched or worn.
UH230, UH230B RINSE ONLY
RINSE-AID
DETERGENT

Item No.	Part No.	Description	Qty.
1	0501869	STRAINER	2
2	0306363	TUBE, 3/8" ID X 12" LG. STIFFENER	1
3	0505483	LABEL, RINSE-AID HOSE	1
4	112883-1	TUBING, 1/8" OD X 1/16" ID	A/R
5	0503695	LABEL, DETERGENT HOSE	A/R
6	0502667	HOSE, 1/4" ID X 3/8" OD PVC	A/R
7	0501519	TIE, NYLON 4"	9
8	0512369	CLAMP, HOSE	2
9	112759	TUBE, PUMP 1/8" ID X 9" LG.	1
10	114202	TUBE, PUMP 3/16" ID X 3/8" OD X 9" LG.	1
11	114203	PUMP HD KIT, PERISTALIC	2
12	0502644	ELBOW, 1/4" HOSE BARB	2
13	100007	SCREW, 10-32 X 3/8" TRUSS SST	3
14	0313644	PIN, HINGE	1
15	0513645	HOLDER, CABLE	4
16	0313393	BRACKET, CHEMICAL PUMP	1
17	0510870-1	GEARMOTOR, 115/60/1, DETERGENT PUMP	1
18	0313431	BRACKET, HINGED PANELS	1
19	0502666	HOSE, 1/8" ID X 1/4" OD PVC	A/R
20	0706635	TUBE, ELEMENT 45 CC	1
21	0707142	ROTOR	1
22	0503756	MOTOR, INJECTOR PUMP	1
23	0510872-1	GEARMOTOR, 115/60/1, RINSE-AID PUMP	1

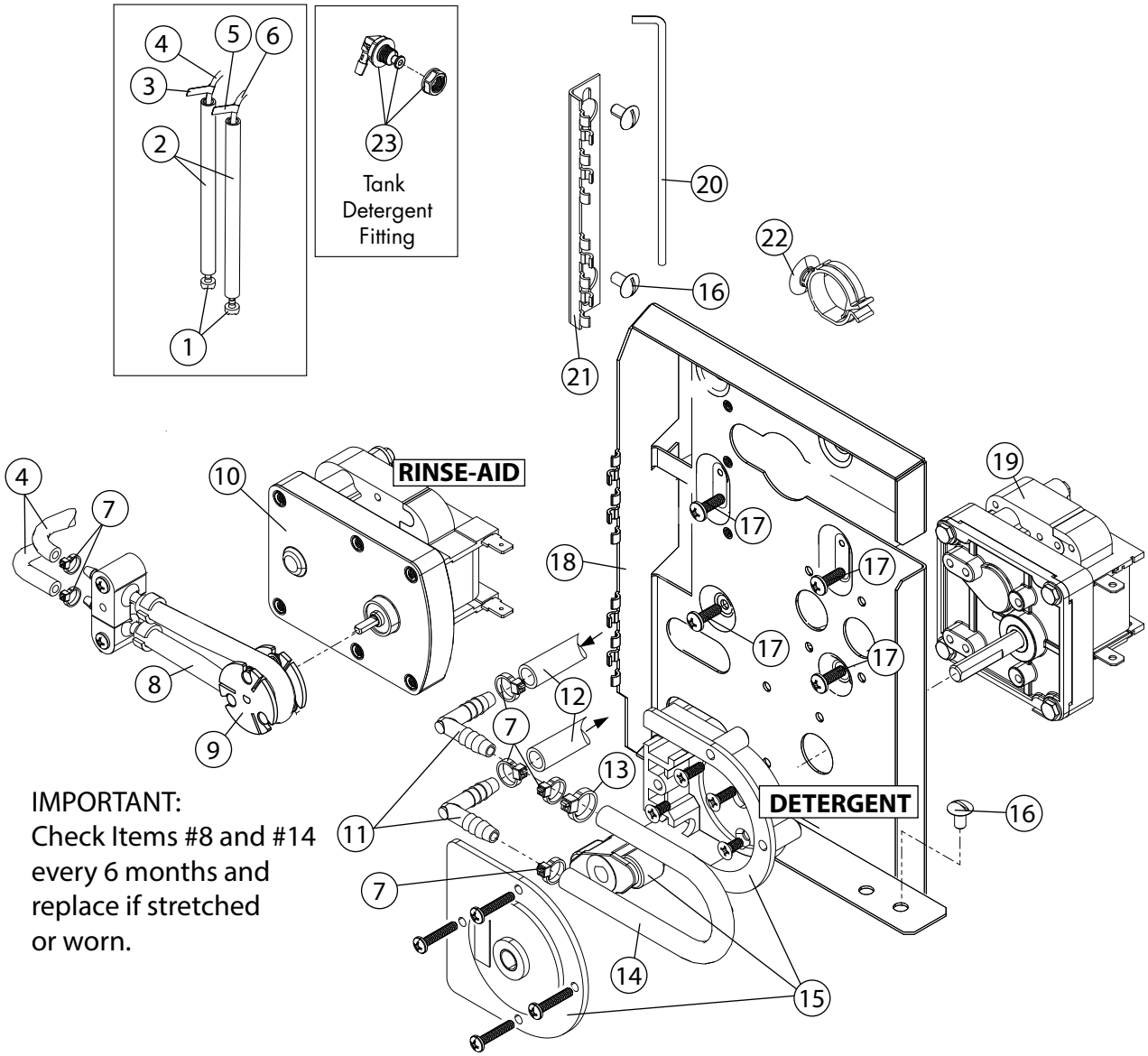

IMPORTANT:
Check Items #8 and #14 every 6 months and replace if stretched or worn.

Item No.	Part No.	Description	Qty.
1	0501869	STRAINER	2
2	0306363	TUBE, 3/8" ID X 12" LG. STIFFENER	1
3	0505483	LABEL, RINSE-AID HOSE	1
4	0502666	HOSE, 1/8" ID X 1/4" OD PVC	A/R
5	0503695	LABEL, DETERGENT HOSE	A/R
6	0502667	HOSE, 1/4" ID X 3/8" OD PVC	A/R
7	0501519	TIE, NYLON 4"	7
8	0706635	TUBE, ELEMENT ASSEMBLY 45CC	1
9	0707142	ROTOR	1
10	0503756	MOTOR, INJECTOR PUMP	1
11	0502644	ELBOW, 1/4" HOSE BARB	2
12	0502667	HOSE, 1/4" ID X 3/8" OD PVC	A/R
13	0512369	CLAMP, HOSE	1
14	114202	TUBE, 3/16" ID X 3/8" OD X 9" LG.	1
15	114203	PUMP HD KIT, PERISTALIC	1
16	100007	SCREW, 10-32 X 3/8" TRUSS SST	3
17	0504822	SCREW, 8-32 X 1/2" PAN HD. SST	4
18	0313393	BRACKET, CHEMICAL PUMP	1
19	0510870-1	GEARMOTOR, 115/60/1, DETERGENT PUMP	1
20	0313644	PIN, HINGE	1
21	0313431	BRACKET, HINGED PANELS	1
22	0513645	HOLDER, CABLE	4
23	0713656	KIT, DETERGENT FITTING	1
—	110750	GASKET	1
—	0513672	NUT, NP 1/4' NPS PP BLACK	1

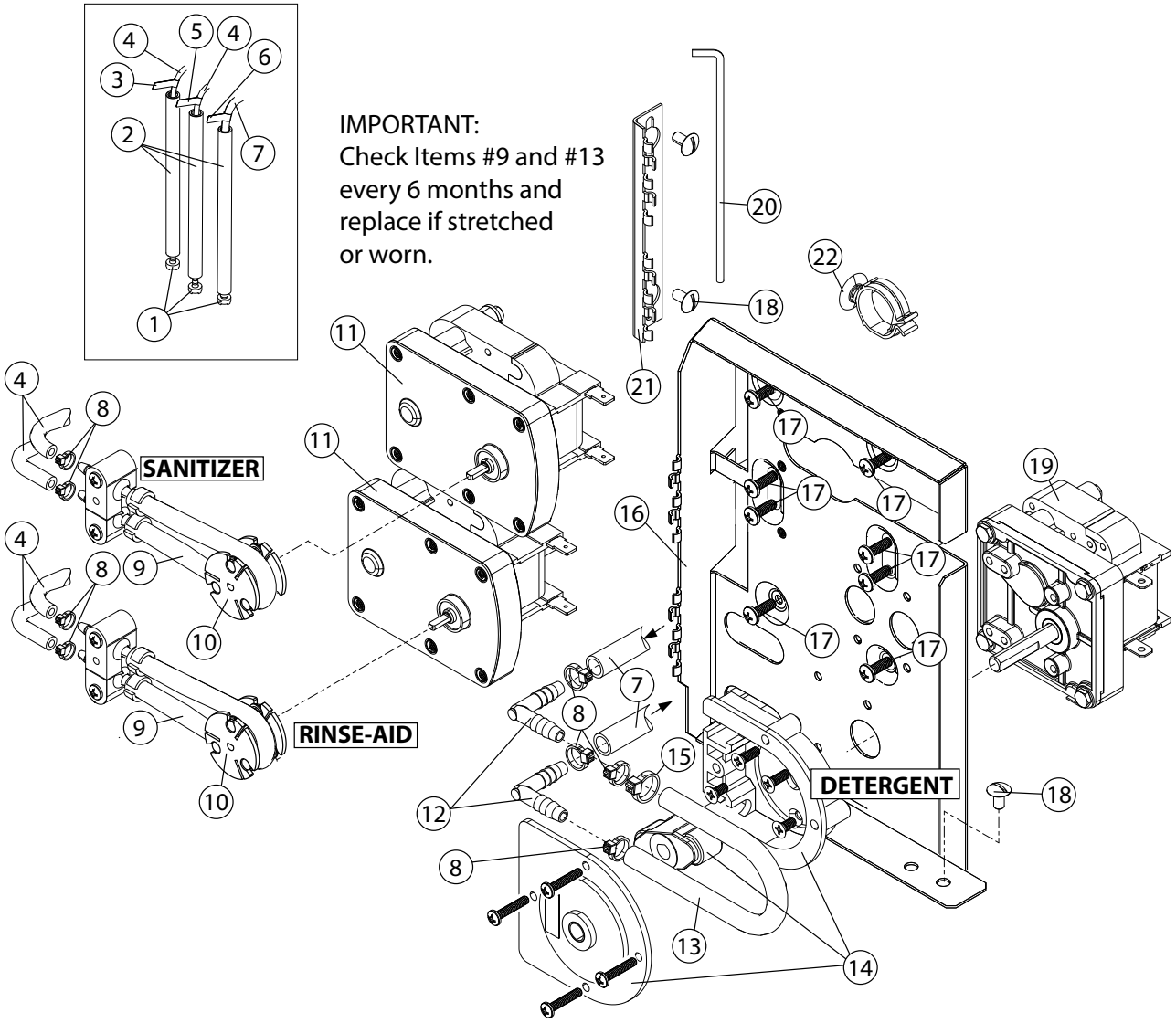
IMPORTANT:
Check Items #9 and #13
every 6 months and
replace if stretched
or worn.
SANITIZER
RINSE-AID
DETERGENT
1
2
3
4
5
6
7
8
9
10
11
12
13
14
15
16
17
18
19
20
21
22

Item No.	Part No.	Description	Qty.
1	0501869	STRAINER	2
2	0306363	TUBE, 3/8" ID X 12" LG. STIFFENER	1
3	0505483	LABEL, RINSE-AID HOSE	1
4	0502666	HOSE, 1/8" ID X 1/4" OD PVC	A/R
5	0503694	LABEL, SANITIZER HOSE	A/R
6	0503695	LABEL, DETERGENT HOSE	A/R
7	0502667	HOSE, 1/4" ID X 3/8" OD PVC	A/R
8	0501519	TIE, NYLON 4"	7
9	0706635	TUBE, ELEMENT ASSEMBLY 45CC	1
10	0707142	ROTOR	1
11	0503756	MOTOR, INJECTOR PUMP	1
12	0502644	ELBOW, 1/4" HOSE BARB	2
13	114202	TUBE, 3/16" ID X 3/8" OD X 9" LG.	1
14	114203	PUMP HD KIT, PERISTALIC	1
15	0512369	CLAMP, HOSE	1
16	0313393	BRACKET, CHEMICAL PUMP	1
17	0504822	SCREW, 8-32 X 1/2" PAN HD. SST	4
18	100007	SCREW, 10-32 X 3/8" TRUSS SST	3
19	0510870-1	GEARMOTOR, 115/60/1	1
20	0313644	PIN, HINGE	1
21	0313431	BRACKET, HINGED PANELS	1
22	0513645	HOLDER, CABLE	4
—	WS1	FLOAT TUBE SENSOR, CHEMICAL ALARM *(Not Shown)*	1

Booster Assembly - UH130B, UH230B

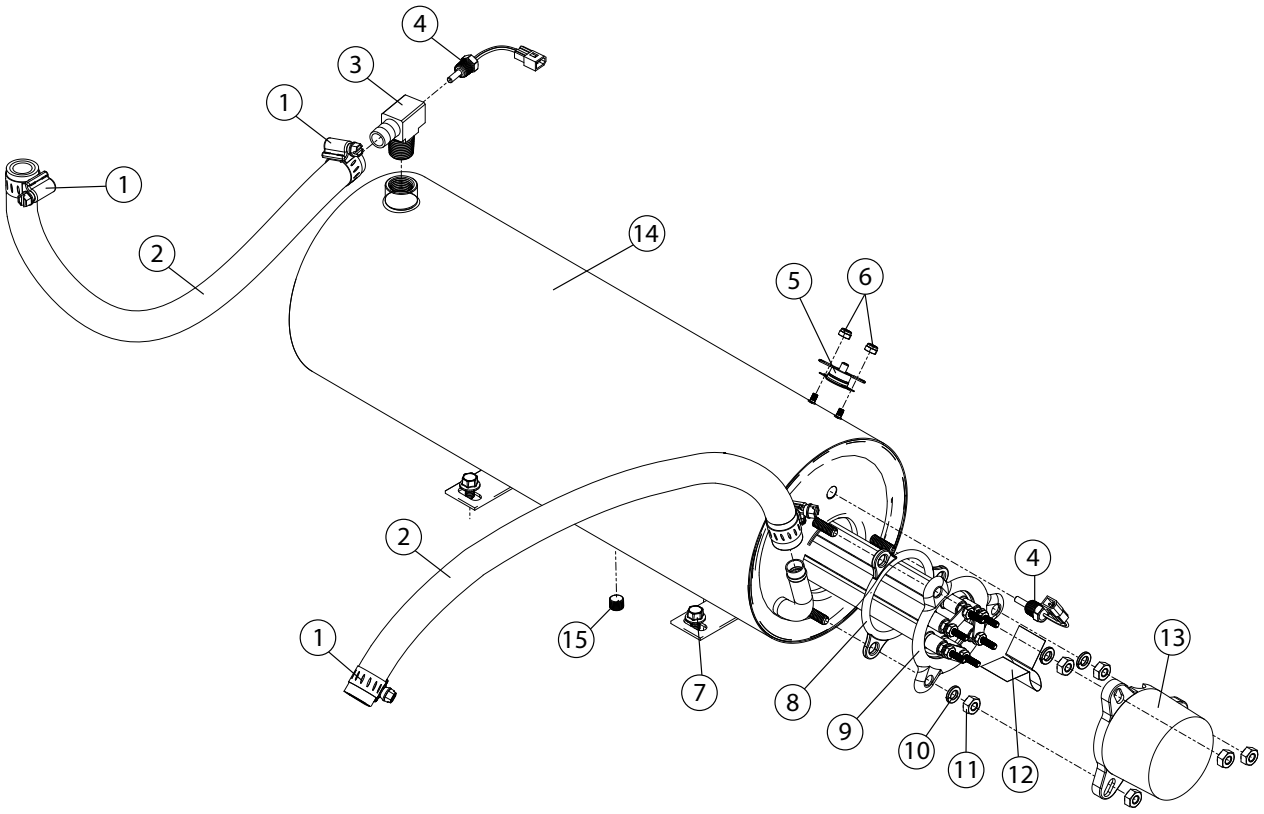

Item No.	Part No.	Description	Qty.
1	0512985	CLAMP, SS GEAR-MIN. 1/2"	4
2	107417	HOSE, RUBBER 1/2" ID X .84" OD	A/R
3	0513314	TEE, RINSE	1
4	0513310	THERMISTOR 10 kΩ, 2-WIRE	2
5	110562	THERMOSTAT, HIGH LIMIT 240°F	1
6	108954	NUT, GRIP 6-32 W/NYLON INSERT SST	2
7	0512185	BOLT, HEX FLANGE, 1/4-20 X 3/8" SST	2
8	109985	SEAL, BOOSTER ELEMENT	1
9	111235-1	BOOSTER, ELEMENT 5 KW, 40°F RISE	1
—	111233	BOOSTER, ELEMENT 9 KW, 70°F RISE	1
10	106482	WASHER, LOCK 1/4" SPLIT SST	3
11	100003	NUT, PLAIN 1/4-20 SST	6
12	111885	INSULATOR	1
13	107908	COVER, ELEMENT	1
14	0713333	TANK, BOOSTER SST	1
15	0508817	PLUG, 1/8"	1
—	0513538	HARNESS, BOOSTER CONTROL *(Not Shown)*	1

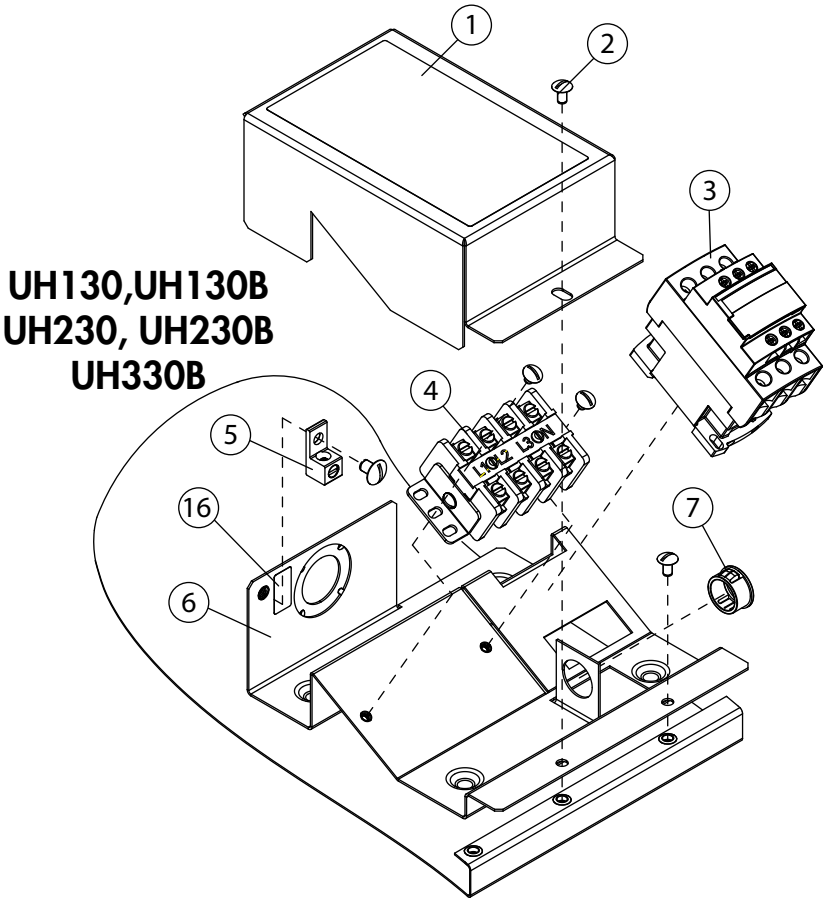
UH130,UH130B
UH230, UH230B
UH330B
1
2
3
4
5
6
7
16
L1/L2
L3/N

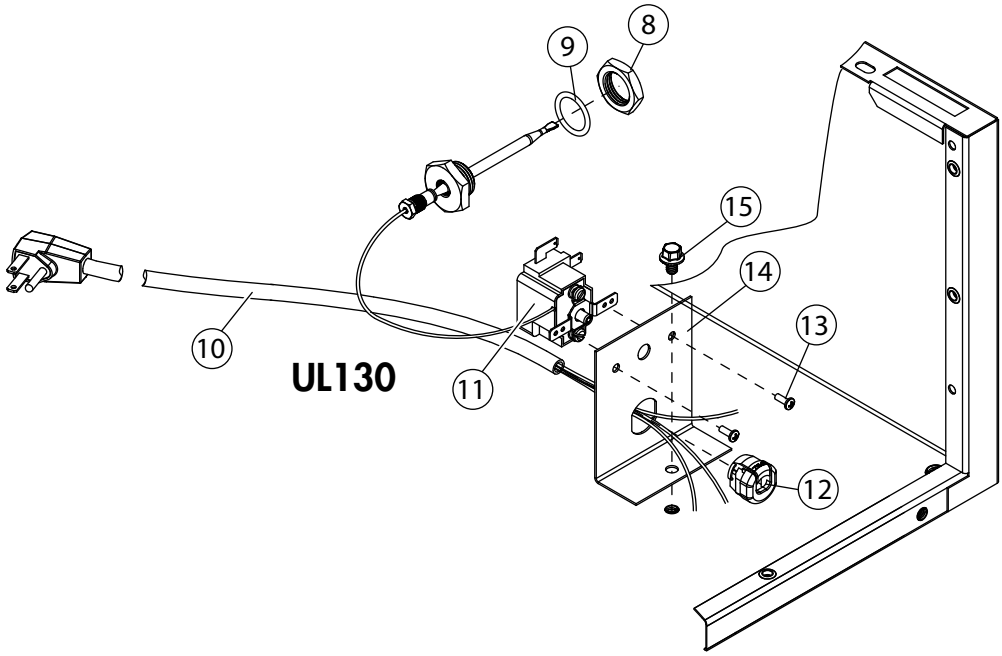
UL130
8
9
10
11
12
13
14
15

Item No.	Part No.	Description	Qty.
1	0313396	COVER, BOX WIRING	1
2	0501411	SCREW, 10-32 X 1/4", TRUSS HD.	2
3	0512432	CONTACTOR, 3-POLE 120VAC COIL	1
4	0509527	BLOCK, TERMINAL, 4-POLE *(All except UL130)*	1
5	103310	LUG, GROUND	1
6	0313395	BOX, WIRING	1
7	107964	BUSHING, STRAIN RELIEF, SMALL	A/R
8	201029-1	NUT, LOCK 1/2 INCH NI PLATED	A/R
9	0512099	O-RING	1
10	0513312	CORD AND PLUG, 115VAC *(UL130 Only)*	1
11	0507323	THERMOSTAT, WASH *(UL130 Only)*	1
12	0503647	RELIEF, STRAIN	1
13	0501450	SCREW, 6-32 X 3/16" NIBS, RH PHIL. SST	2
14	0313410	BRACKET, POWER CORD	1
15	0512185	BOLT, HEX FLANGE, 1/4-20 X 3/8" SST	1
16	0503592	LABEL, GROUND	1

Timer Control Board Assembly - UH130B, UH230B, UH330B

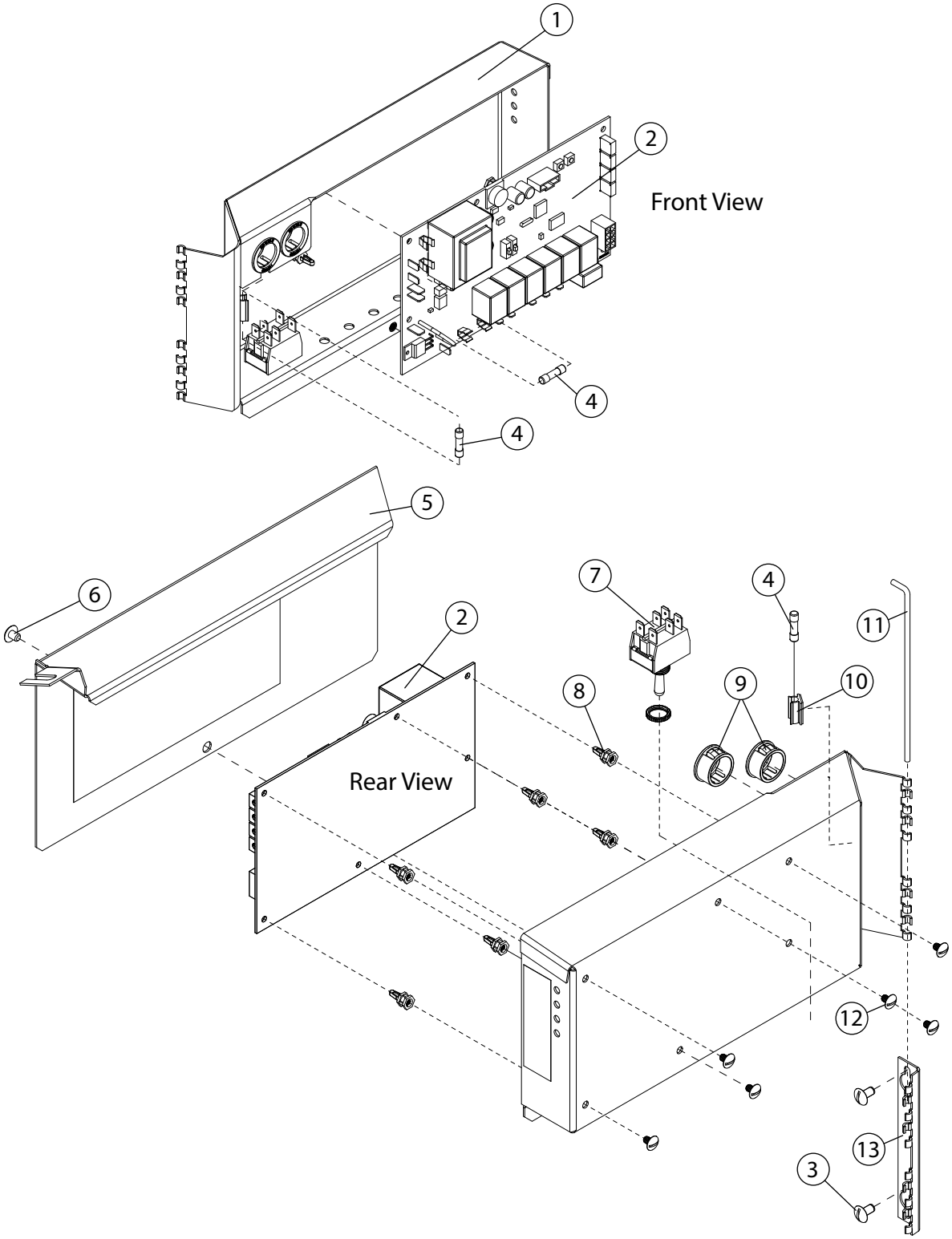

Item No.	Part No.	Description	Qty.
1	0313397	BOX, CONTROL BOARD (ALL EXCEPT UH330B)	1
–	0313397-1	BOX, CONTROL BOARD (UH330B ONLY)	1
2	0712105	TIMER CKT. BD. (ALL EXCEPT UH330B)	1
–	0513575	TIMER CKT. BD. (UH330B ONLY)	1
3	0501464	SCREW, 10-24 X 3/8; TRUSS HD. SST	2
4	0512373	FUSE, 4A 250V (ALL EXCEPT UH330B)	1
–	0513698	FUSE, 6A 250V (UH330B ONLY)	1
5	0313398	COVER, BOX (ALL EXCEPT UH330B)	1
–	0313398-1	COVER, BOX (UH330B ONLY)	1
6	0501411	SCREW, 10-32 X 1/4" SST	1
7	0501373	SWITCH, BOOSTER FILL	1
8	0512973	STANDOFF	6
9	107964	BUSHING, STRAIN RELIEF	2
10	0512781	HOLDER, FUSE	1
11	0313644	PIN, HINGE	1
12	0501408	SCREW, 8-32 X 1/4" TRUSS HD. PHIL. SST	6
13	0313431	BRACKET, HINGED PANELS	1

Wash and Rinse Spray Arms and Drain Valve - UH230, UH230B, UH330B

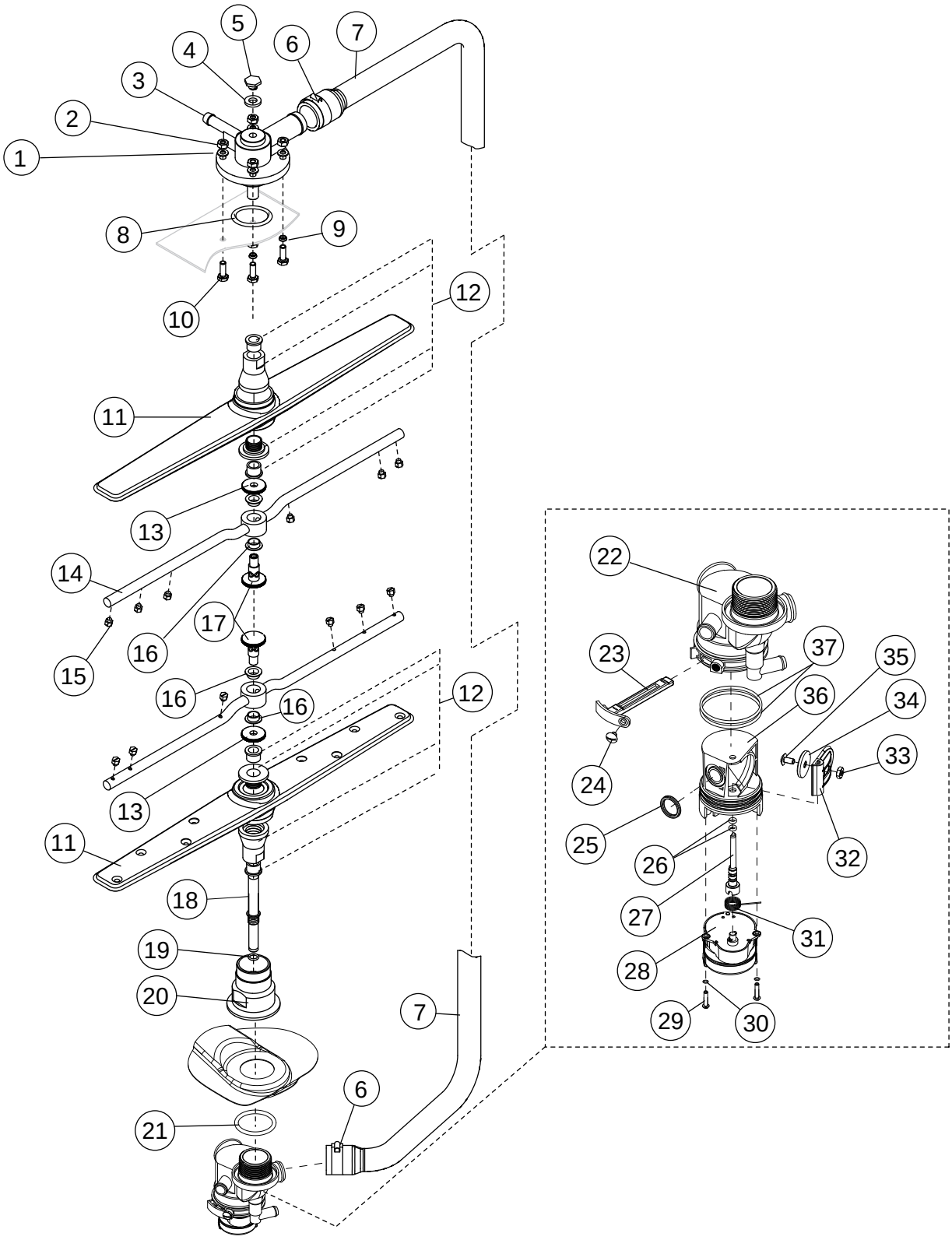

Item No.	Part No.	Description	Qty.
1	0501478	WASHER, 17/64 id X 9/16" OD SST	4
2	107967	NUT, HEX 1/40-20 NYLON INSERT SST	4
3	H35509	HUB, UPPER SPRAY ARMS	1
4	107873	WASHER, PACKING	1
5	110215	SCREW, RETAINING	1
6	0502571	CLAMP, HOSE GEAR 1-1/2" SST	2
7	0512120	HOSE, UPPER WASH ARM	1
8	0512133	O-RING, 2-1/8" OD X 1-3/4" ID X 3/16"	1
9	0501481	WASHER, NYLITE	4
10	100738	BOLT, 1/4-20 X 1" SST	4
11	H420548	WASH ARM ASSEMBLY (Includes Item 12)	2
12*	0712749	BEARING ASSEMBLY	2
13	H34998	NUT, SPACER	2
14	H36211	RINSE ARM ASSEMBLY (Includes Items 13, 16, and 17)	2
15	H37149	NOZZLE, RINSE ARM	12
16	H190663	BEARING, RINSE ARM	4
17	H36275	SPINDLE, RINSE ARM	2
18	0512124	SHAFT, LOWER	1
19	0512239	O-RING	1
20	0512066	HUB, LOWER WASH ARM	1
21	0512133	O-RING, 2-1/8" OD X 1-3/4" ID X 3/16"	1
22	0513439	HOUSING, MANIFOLD FWR	1
23	0513443	PIN, RETENTION	1
24	0509439	SCREW, RETENTION PIN 10-32 X 5/16" SST	1
25	0513446	O-RING, QUAD	1
26	0513445	O-RING, PIVOT SHAFT	2
27	0513447	SHAFT, FLAPPER	1
28	0712123	MOTOR, DRAIN VALVE	1
—	0509257	PIN, MOTOR (COMES WITH MOTOR)	1
29	104883	SCREW, MOTOR 6-32 X 3/8" SST	2
30	0501497	WASHER,SPLIT LOCK #8	2
31	0512126	SPRING, TORSION	1
32	0513442	FLAPPER	1
33	100194	NUT, FLAPPER SEAL 10-32 SST	1
34	0512127	GASKET, FLAPPER	1
35	100007	SCREW, FLAPPER SEAL 10-32 X 3/8" RD.HD. SST	1
36	0513441	BODY, CARTRIDGE DRAIN VALVE	1
37	0513444	O-RING, CARTRIDGE BODY	2
—	0713667	CARTRIDGE ASSEMBLY, DRAIN VALVE COMPLETE INCLUDES ITEMS 23-37	1

** Note:*
The bearing assembly, P/N 0712749 includes 2 bearings, 1 locknut, and 1 wash arm hub.
The bearings, locknut and hub are not available as separate service replacement parts.

Wash/Rinse Spray Arm and Drain Valve - UH130, UH130B, UL130

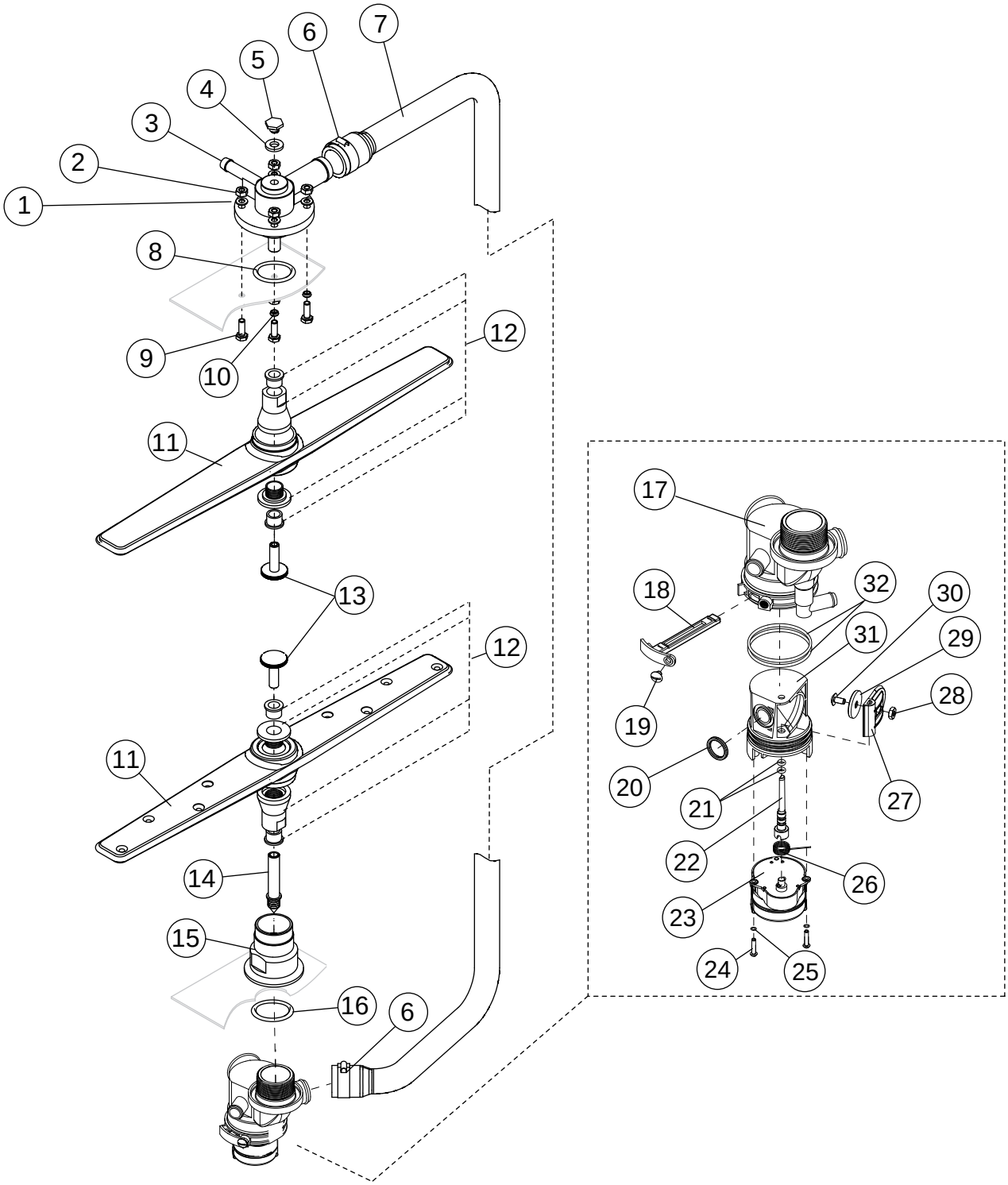

Item No.	Part No.	Description	Qty.
1	0501478	WASHER, 17/64" ID X 9/16" OD SST	4
2	107967	NUT, HEX SST 1/4-20 NYLON INSERT	4
3	H35509-1	HUB, UPPER WASH ARM	1
4	107873	WASHER, PACKING	1
5	110215	SCREW, RETAINING	1
6	0502571	CLAMP, HOSE GEAR HOSE 1-1/2" SST	2
7	0512120	HOSE, UPPER WASH ARM	1
8	0512133	O-RING, 2-1/8" OD X 1-3/4" ID X 3/16	1
9	100738	BOLT, 1/4-20 X 1" HEX. HD. SST	4
10	0501481	WASHER, NYLTITE	4
11	H420548	WASH ARM ASSEMBLY *(Includes Item 12)*	2
12*	0712749	BEARING ASSEMBLY	2
13	0512129	NUT, WASH ARM	2
14	0512125	SHAFT, LOWER	1
15	0512066	HUB, LOWER WASH ARM	1
16	0512133	O-RING, 2-1/8" OD X 1-3/4" ID X 3/16	1
17	0513440	HOUSING, MANIFOLD	1
18	0513443	PIN, RETENTION	1
19	0509439	SCREW, RETENTION PIN 10-32 X 5/16" SST	1
20	0513446	O-RING, QUAD	1
21	0513445	O-RING, PIVOT SHAFT	2
22	0513447	SHAFT, FLAPPER	1
23	0712123	MOTOR, DRAIN VALVE	1
—	0509257	PIN, MOTOR (COMES WITH MOTOR)	1
24	104883	SCREW, MOTOR 6-32 X 3/8" SST	2
25	0501497	WASHER, SPLIT LOCK #8	2
26	0512126	SPRING, TORSION	1
27	0513442	FLAPPER	1
28	100194	NUT, FLAPPER SEAL	1
29	0512127	GASKET, FLAPPER	1
30	0501412	SCREW, FLAPPER SEAL 10-32 X 3/8"	1
31	0513441	BODY, CARTRIDGE DRAIN VALVE	1
32	0513444	O-RING, CARTRIDGE BODY	2
—	0713667	CARTRIDGE ASSEMBLY, COMPLETE INCLUDES ITEMS 18-32	1

** Note:*
The bearing assembly, P/N 0712749 includes 2 bearings, 1 locknut, and 1 wash arm hub.
The bearings, locknut and hub are not available as separate service replacement parts.

Control Panel - UH130, UH130B

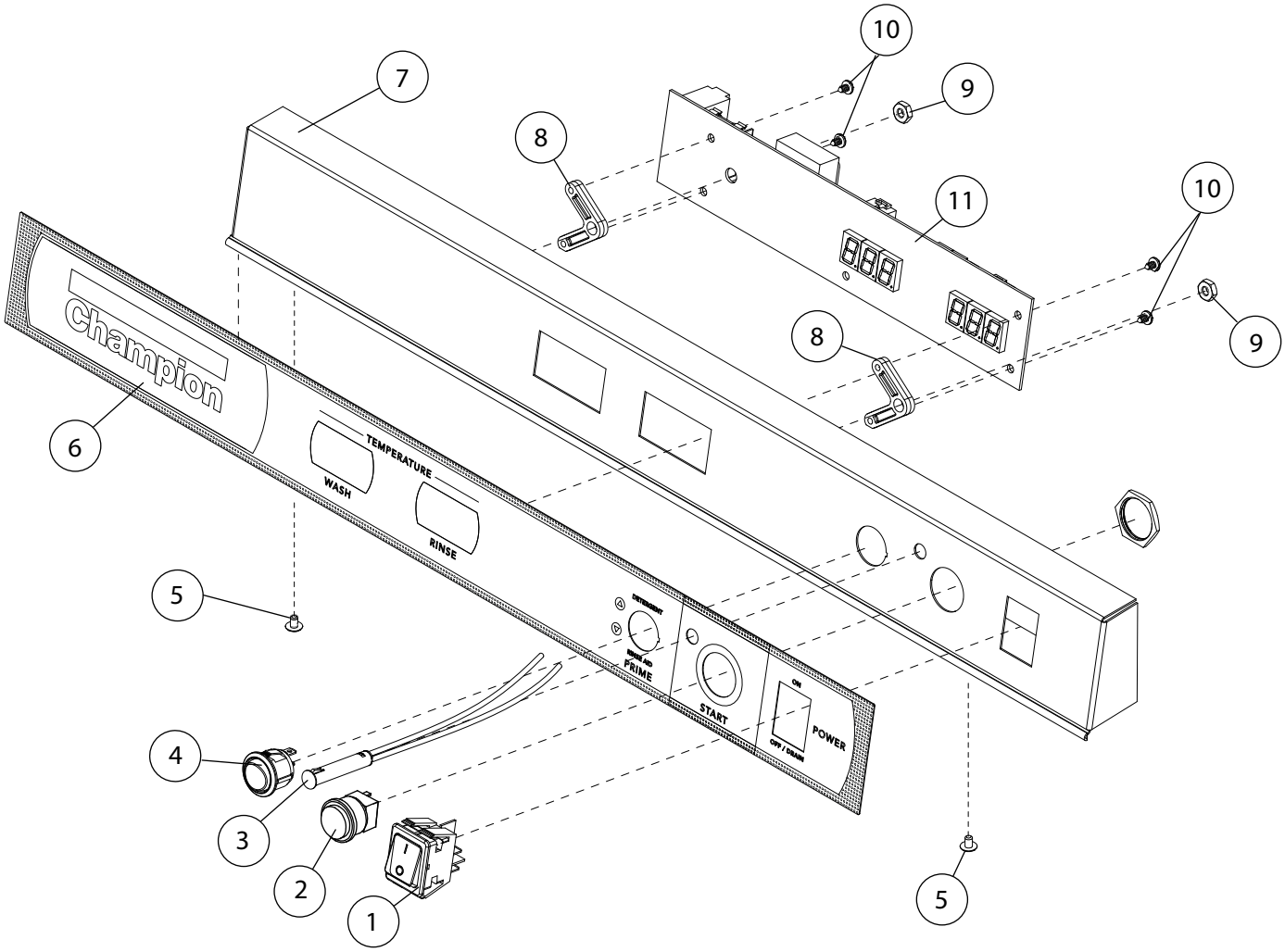

Item No.	Part No.	Description	Qty.
1	0512221	SWITCH, ROCKER DPST 250V NEON	1
2	0512214	SWITCH, PUSH-BUTTON, GREEN	2
3	0512232	LIGHT, INDICATOR, GREEN	2
4	0512226	SWITCH, ROCKER RND SPDT MOMENTARY	1
5	0501408	SCREW, TRUSS PHIL. SST 8-32 X 1/4"	2
6	0513540	LABEL, FACIA	1
7	0313418	PANEL, FACIA	1
8	0512357	STANDOFF, LED DISPLAY BOARD	2
9	0503580	NUT, 10-32	2
10	0501563	SCREW, #8 X 3/8"	4
11	0512106-1	TEMPERATURE INDICATOR BD., DIGITAL	1
–	0512362	HARNESS, DIGITAL DISPLAY *(Not Shown)*	1
–	0513538	HARNESS, BOOSTER CONTROL *(Not Shown)*	1
–	0513361	HARNESS, MACHINE *(Not Shown)* (Does not include Booster or Digital display harness)	1

Control Panel - UH230, UH230B

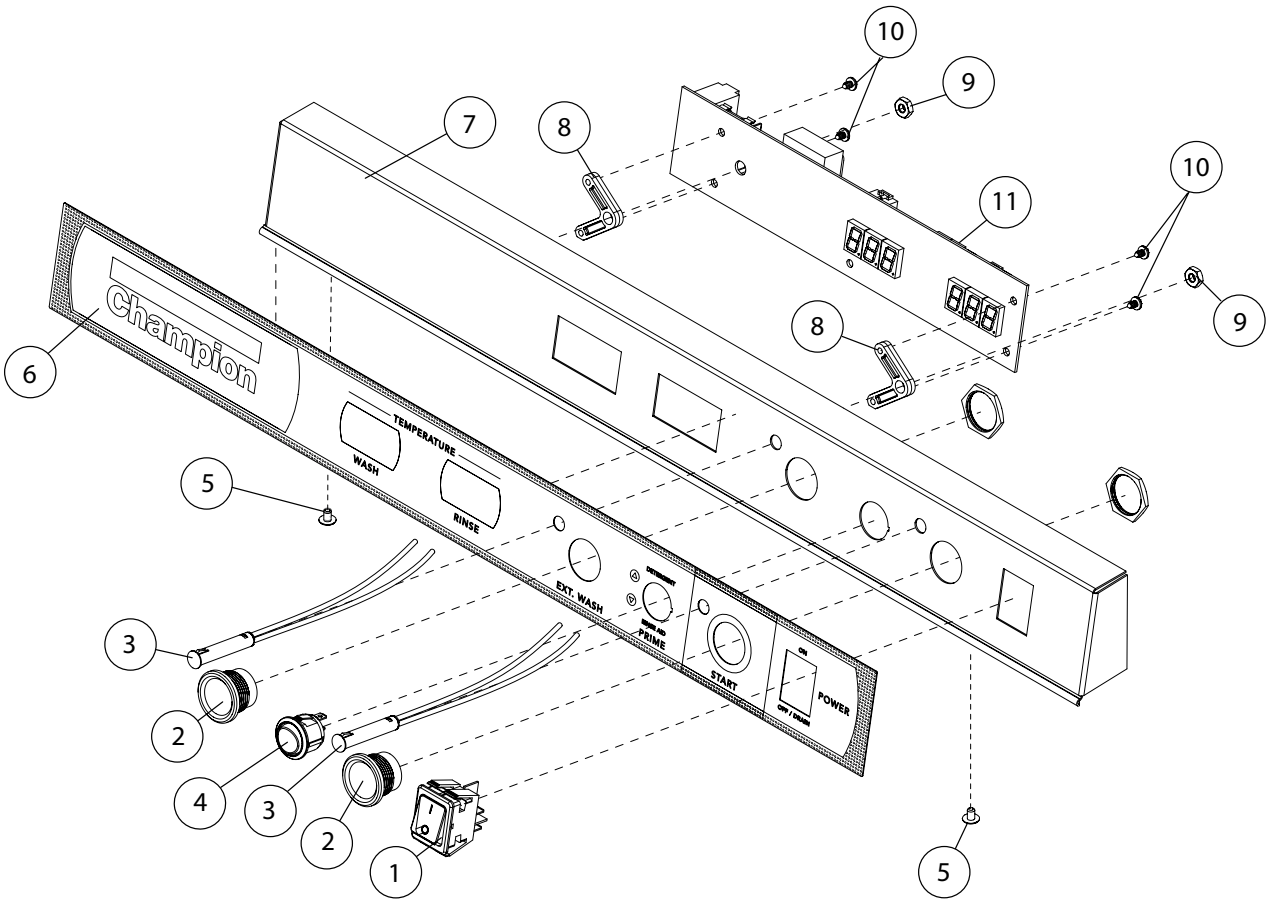

Item No.	Part No.	Description	Qty.
1	0512221	SWITCH, ROCKER DPST 250V NEON	1
2	0512213	SWITCH, PIEZIO	2
3	0512232	LIGHT, INDICATOR, GREEN	2
4	0512226	SWITCH, ROCKER RND SPDT MOMENTARY	1
5	0501408	SCREW, TRUSS PHIL. SST 8-32 X 1/4"	2
6	0513539	LABEL, FACIA	1
7	0313417	PANEL, FACIA	1
8	0512357	STANDOFF, LED DISPLAY BOARD	2
9	0503580	NUT, 10-32	2
10	0501563	SCREW, #8 X 3/8"	4
11	0512106-1	TEMPERATURE INDICATOR BD., DIGITAL	1
—	0512362	HARNESS, DIGITAL DISPLAY *(Not Shown)*	1
—	0513538	HARNESS, BOOSTER CONTROL *(Not Shown)*	1
–	0513361	HARNESS, MACHINE *(Not Shown)* (Does not include Booster or Digital display harness)	1

Control Panel - UH330B

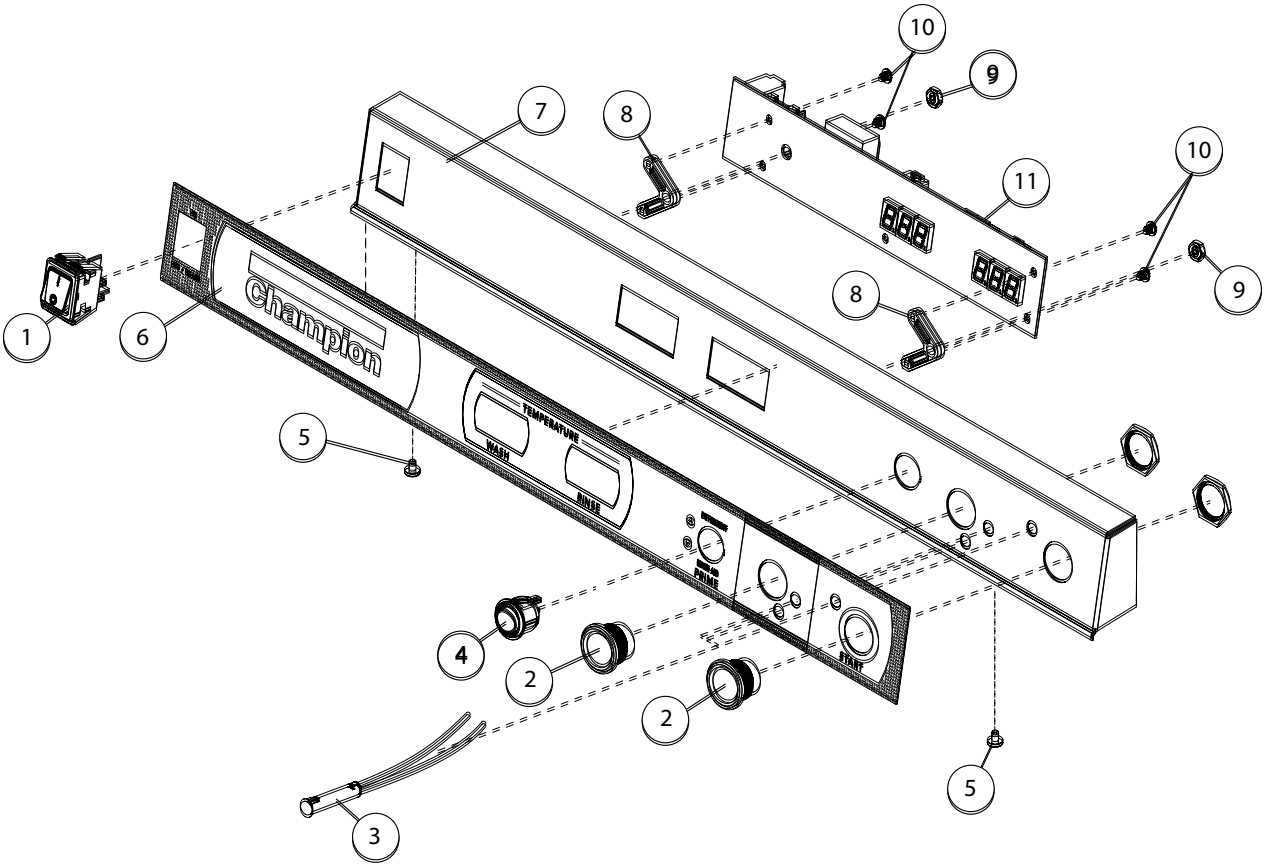

Item No.	Part No.	Description	Qty.
1	0512221	SWITCH, ROCKER DPST 250V NEON	1
2	0512213	SWITCH, PIEZIO	2
3	0512232	LIGHT, INDICATOR, GREEN	3
4	0512226	SWITCH, ROCKER RND SPDT MOMENTARY	1
5	0501408	SCREW, TRUSS PHIL. SST 8-32 X 1/4"	2
6	0513579	LABEL, FACIA	1
7	0713583	PANEL, FACIA	1
8	0512357	STANDOFF, LED DISPLAY BOARD	2
9	0503580	NUT, 10-32	2
10	0501563	SCREW, #8 X 3/8"	4
11	0512106-1	TEMPERATURE INDICATOR BD., DIGITAL, UH330B M4 Prior to S/N W170568116	1
–	0514315	TEMPERATURE INDICATOR BD., DIGITAL, UH330B M4.2 Beginning with S/N W170568116 and above	1
—	0512362	HARNESS, DIGITAL DISPLAY *(Not Shown)*	1
–	0513538	HARNESS, BOOSTER CONTROL *(Not Shown)*	1
–	0513576	HARNESS, MACHINE *(Not Shown)* (Does not include Booster or Digital display harness)	1

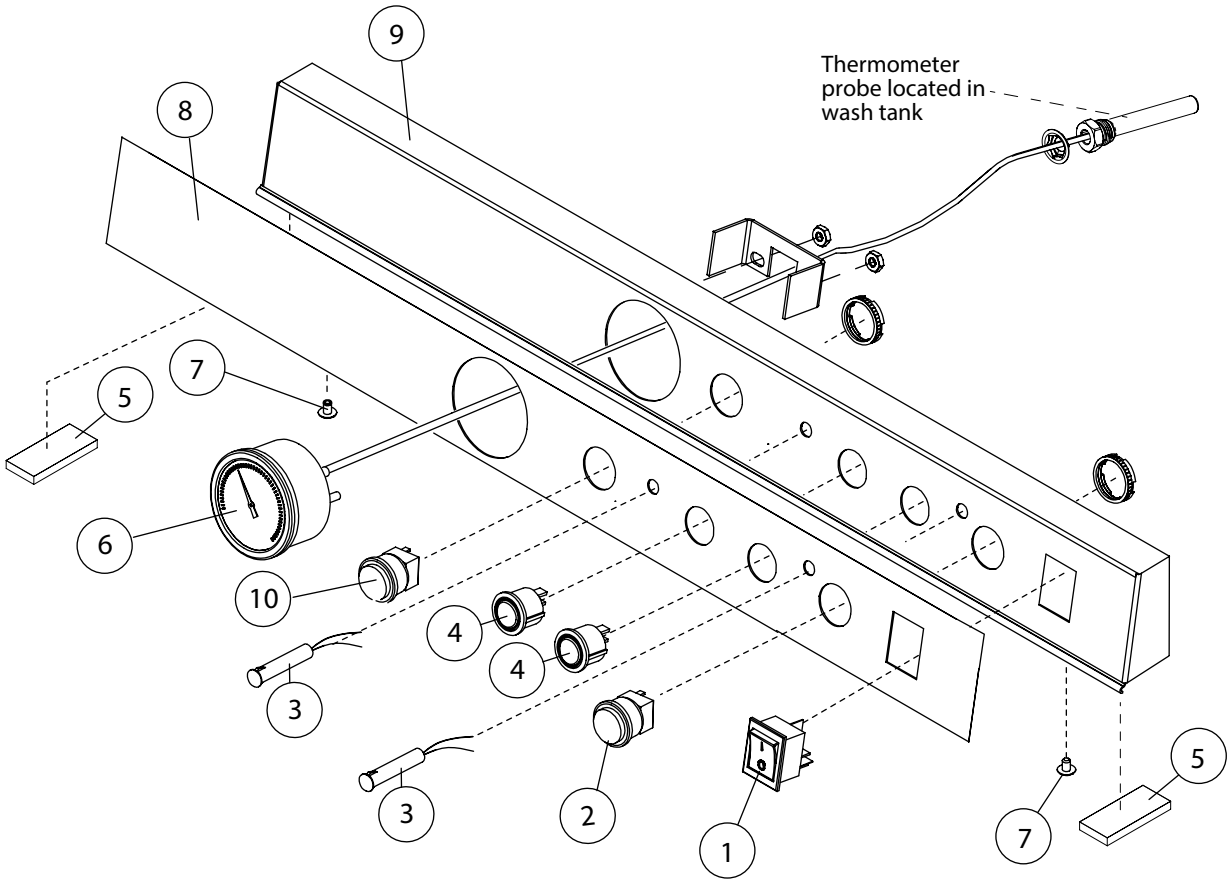
9
8
Thermometer
probe located in
wash tank
7
5
6
10
4
4
3
3
2
1
7
5

Item No.	Part No.	Description	Qty.
1	0512220	SWITCH, ROCKER DPST 125V NEON	1
2	0512214	SWITCH, PUSH-BUTTON, GREEN	1
3	0512232	LIGHT, INDICATOR, GREEN	2
4	0512226	SWITCH, ROCKER RND SPDT MOMENTARY	2
5	0512320	GASKET, STEAM	1
6	0512107	THERMOMETER, 2" DIAL, 7" CAPILLARY	1
7	0501408	SCREW, TRUSS PHIL. SST 8-32 X 1/4"	2
8	0513503	LABEL, FACIA	1
9	0313419	PANEL, FACIA	1
10	0512215	SWITCH, PUSH BUTTON, WHITE	1
–	0513362	HARNESS, MACHINE *(Not Shown)*	1

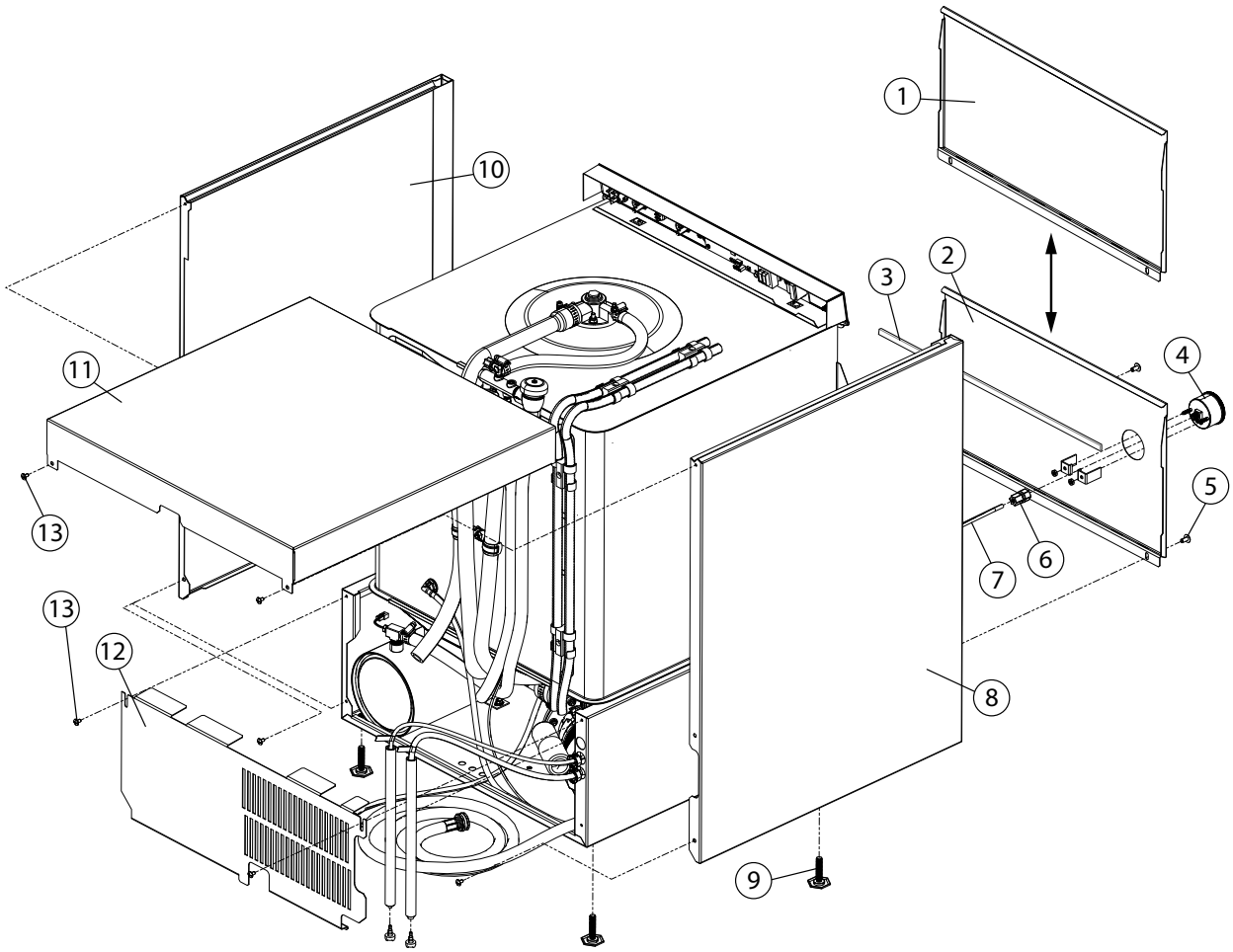
1
2
3
4
5
6
7
8
9
10
11
12
13
13

Item No.	Part No.	Description	Qty.
1	0313406	PANEL, FRONT WITHOUT GAUGE HOLE	1
2	0313407	PANEL, FRONT WITH GAUGE HOLE	1
3	0512319	GASKET, 1/8" x 5/8" x 21-1/2"	1
4	109812	GAUGE, PRESSURE 0-60 PSI	1
5	100779	SCREW 1/4-20 X 5/8" TRUSS SS PHIL	A/R
6	0513659	FITTING, 1/4" TUBE X 1/8" FNPT PP	1
7	107928	TUBING, 1/4" NATURAL	A/R
8	0313403	PANEL, LH SIDE	1
9	0503718	FOOT, ADJUSTING	4
10	0313402	PANEL, RH SIDE	1
11	0313401	PANEL, TOP	1
12	0313404	PANEL, REAR	1
13	100007	SCREW, TRUSS SLOT SST 10-32 X 3/8"	A/R

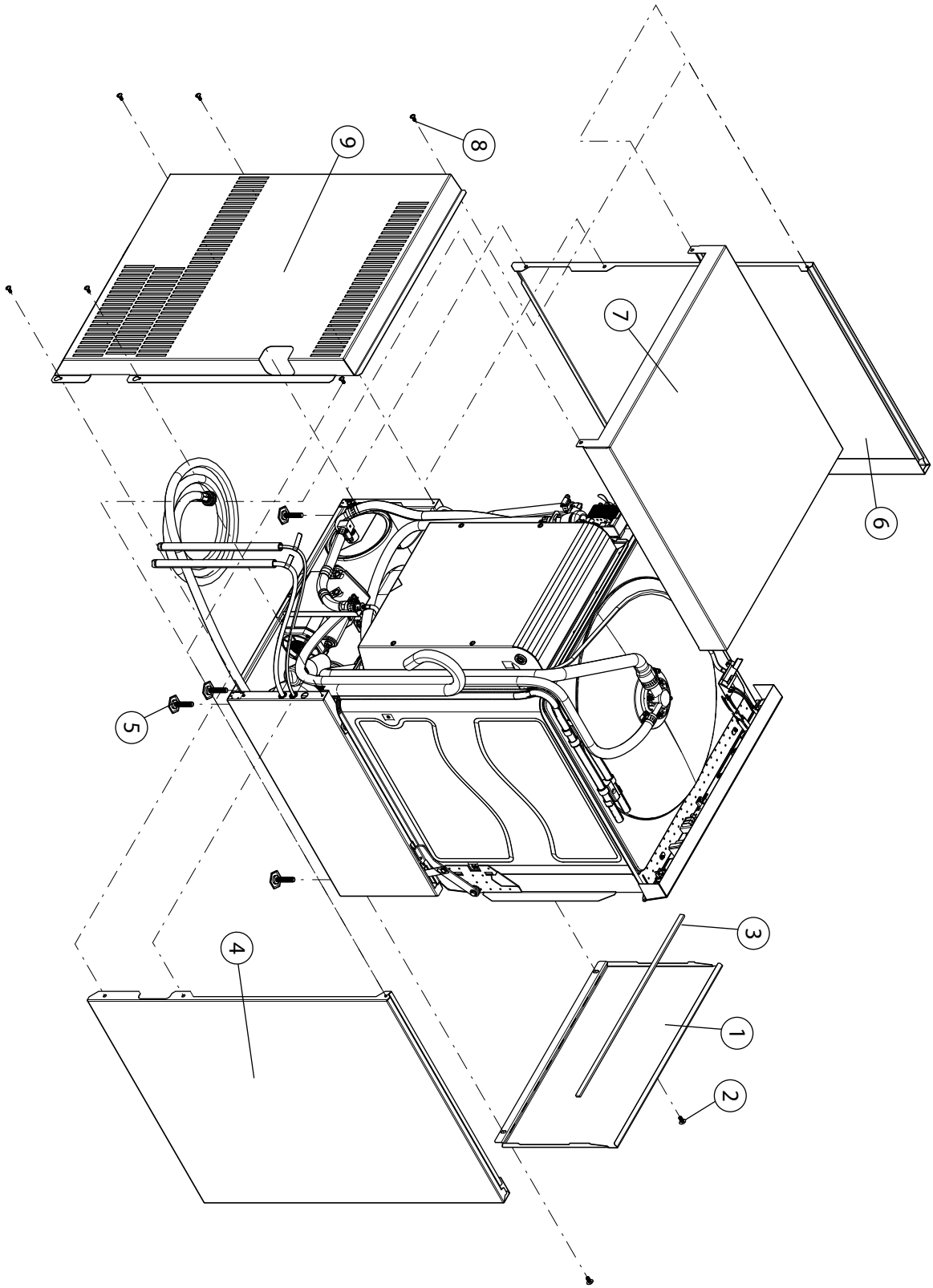
9
8
7
6
5
4
3
1
2

Item No.	Part No.	Description	Qty.
1	0313406	PANEL, FRONT	1
2	100779	SCREW 1/4-20 X 5/8" TRUSS SS PHIL	A/R
3	0512319	GASKET, 1/8" X 5/8" X 21-1/2"	1
4	0313403	PANEL, LH SIDE	1
5	0503718	FOOT, ADJUSTING	4
6	0313402	PANEL, RH SIDE	1
7	0313584	PANEL, TOP	1
8	100007	SCREW, TRUSS SLOT SST 10-32 X 3/8"	A/R
9	0313404	PANEL, REAR	1

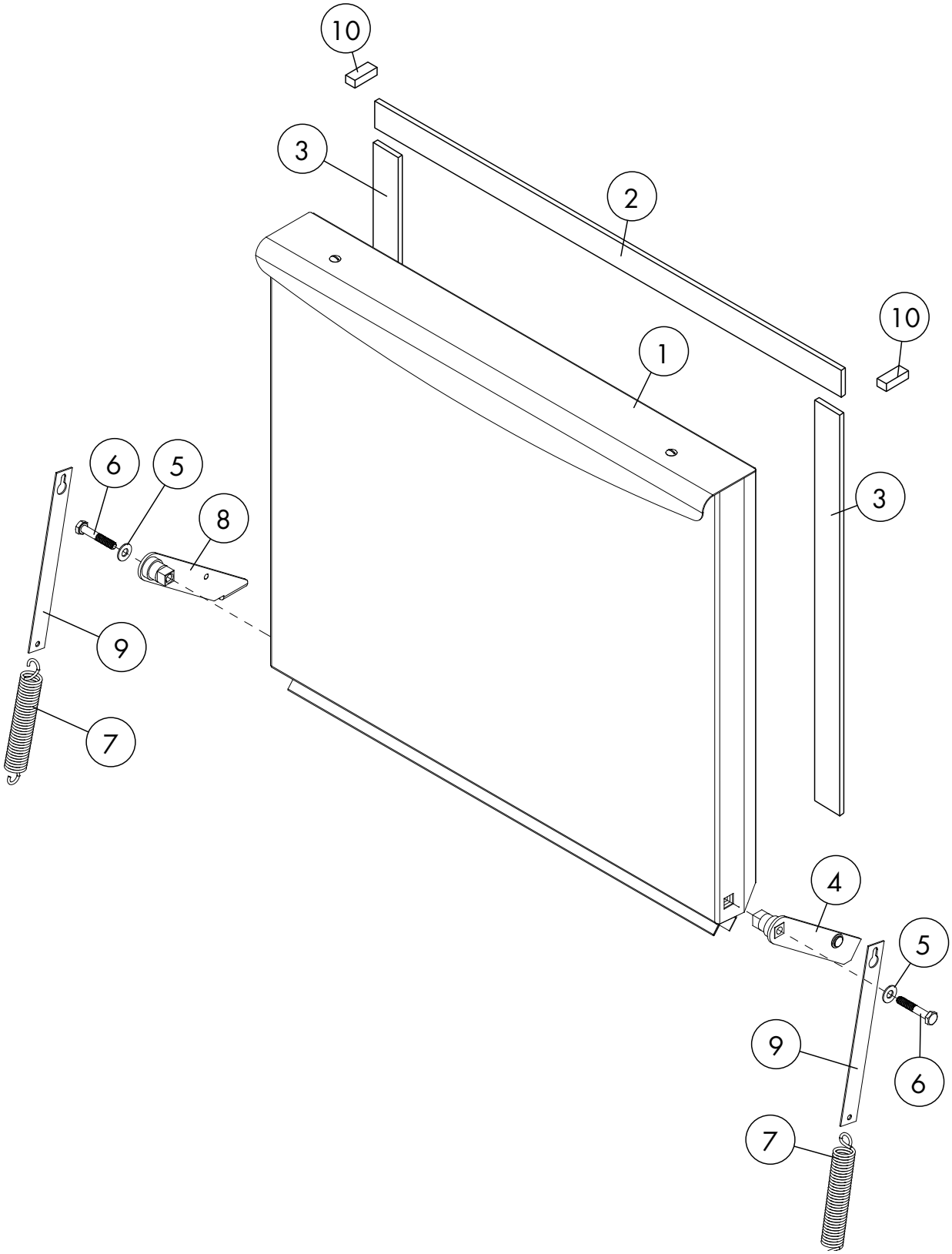
10
3
2
10
1
6
5
8
3
9
7
4
5
9
6
7

Item No.	Part No.	Description	Qty.
1	0713136	DOOR ASSEMBLY	1
2	0513558	GASKET, DOOR TOP	1
3	0513727	GASKET, DOOR SIDE	2
4	0713428	HINGE, RH ASSY	1
5	0501476	WASHER, 9/32" X 5/8" OD SS	1
6	0501422	BOLT, HEX SS 1/4-20 X 1-1/2"	1
7	0513332	SPRING, DOOR	2
8	0713429	HINGE, LH ASSY	1
9	0313430	ARM, DOOR SPRING	2
10	0512320	GASKET, STEAM (UL130 ONLY)	2

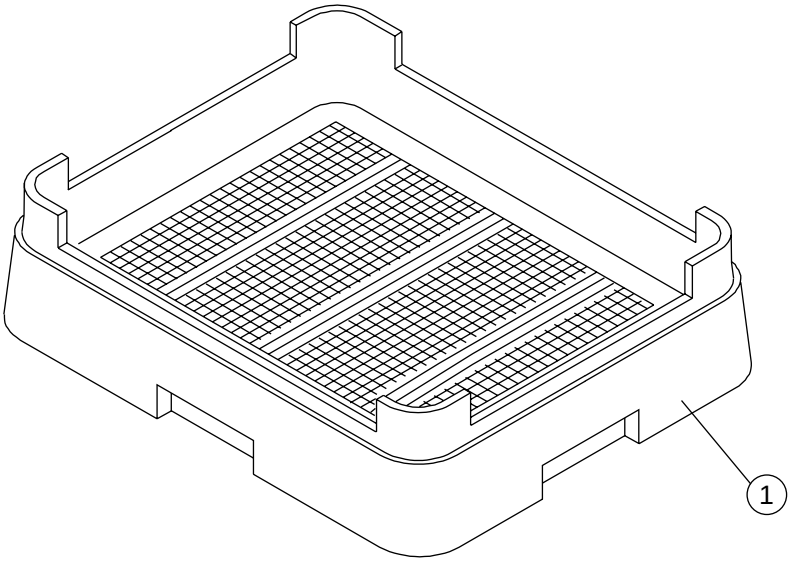
1

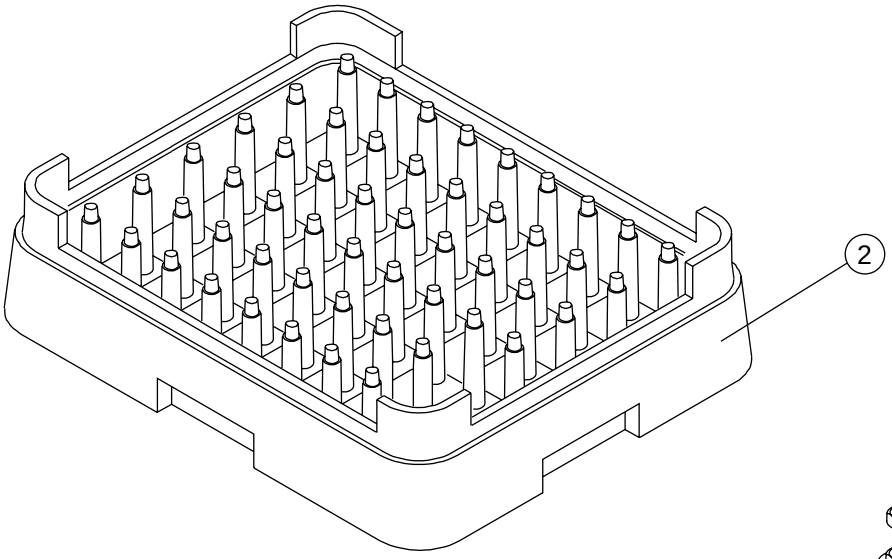
2

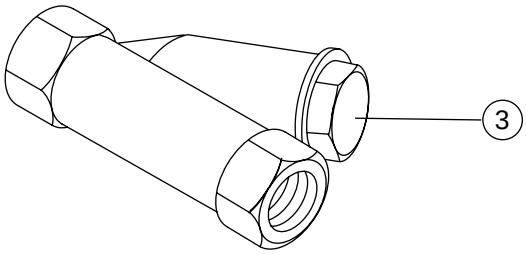
3

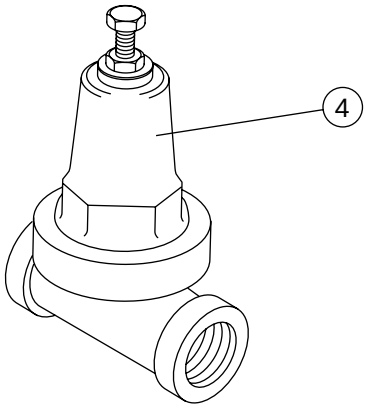
4

Item No.	Part No.	Description	Qty.
1	101273	DISH RACK, FLAT-BOTTOM	AR
2	101285	DISH RACK, PEG	AR
3	104421	STRAINER, LINE 1/2" BRONZE *(UH230, UH230B)*	1
4	108265	VALVE, PRESSURE REGULATING (PRV) *(UH230, UH230B)*	1

This Page Intentionally Left Blank